STATE	FED. ROAD DIST. NO.	FISCAL YEAR	SHEET NO.	TOTAL SHEETS
IOWA	6		1	125

PROJECT NUMBER
FFD-561-1(2)--2N-82

R.O.W. PROJECT NUMBER
F-561-1(3)--20-82

PRELIMINARY ENGINEER NUMBER
F-561-1(900)--20-82

IOWA
DEPARTMENT OF TRANSPORTATION
Highway Division

PLANS OF ~~PROPOSED~~ IMPROVEMENT ON THE

PRIMARY ROAD SYSTEM

SCOTT COUNTY

BRIDGES

U.S. 561 FROM I-80 N. 4.5 MILES
SCALES: AS NOTED

THE STANDARD SPECIFICATIONS, SERIES OF 1977
OF THE IOWA DEPARTMENT OF TRANSPORTATION, ~~SHALL~~ DID APPLY TO CONSTRUCTION WORK ON THIS PROJECT

(PLUS CURRENT SUPPLEMENTAL SPECIFICATIONS AND SPECIAL PROVISIONS)

DESIGN STRESSES:
Design stresses for the following materials are in accordance with the AASHTO Standard Specifications for Highway Bridges, Series of 1977.
Reinforcing Steel in accordance with Section 1.5, Grade 40 and Grade 60.
Concrete in accordance with Section 1.5, f'c = 3,500 psi.
Structural Steel in accordance with Section 1.7. ASTM A-36. Fatigue stress cycles based on Case II.

CONVENTIONAL SIGNS

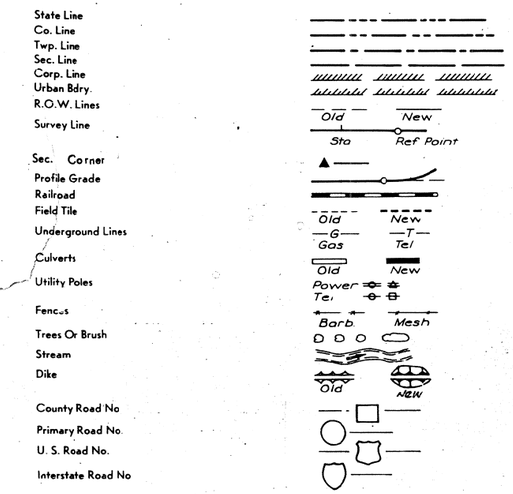

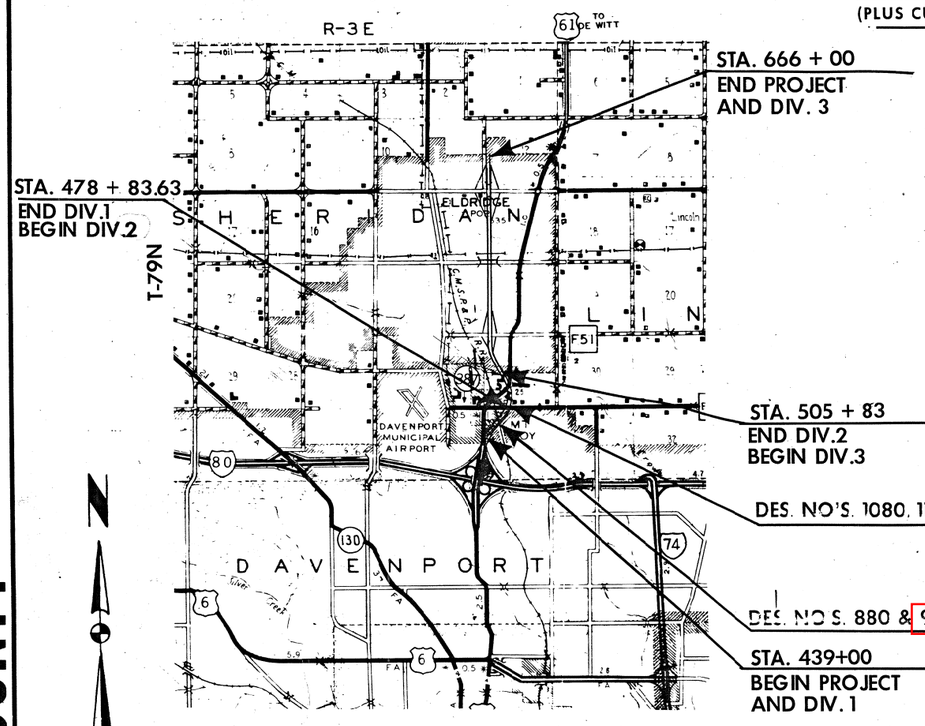

LOCATION MAP

LOCATION MAP SCALE
0 1 2 3
miles

101-6

DESIGN DATA

RURAL			URBAN		
1979 AADT	14,250	V.P.D.	1979 AADT	14,250	V.P.D.
1999 AADT	29,910	V.P.D.	1999 AADT	29,910	V.P.D.
1999 DHV	3,424	V.P.H.	1999 DHV	3,424	V.P.H.
DIRECTIONAL		%	DIRECTIONAL		%
TRUCKS	11	%	TRUCKS	11	%
DESIGN V		M.P.H.	DESIGN V		M.P.H.
CLASS 1	ACCESS CONTROL		CLASS 1	ACCESS CONTROL	

MILEAGE SUMMARY

105.1

DIV.	LOCATION	LIN. FT.	MILES
1	URBAN: (City of Davenport)		
	Sta. 439+00.00 to Sta. 478+83.63	3,983.63	
	Bridges at Sta. 462+20.68	345.20	
	Bridges at Sta. 478+83.54 (South Half)	132.30	
	Total Length of Roadway - Div. 1	3,506.13	0.664
	Total Length of Bridges - Div. 1	477.50	0.090
	Total Length of Div. 1	3,983.63	0.754
2	RURAL: (Scott Co.)		
	Sta. 478+83.63 to Sta. 505+83.00	2,699.37	
	Bridges at Sta. 478+83.54 (North Half)	132.30	
	Bridges at Sta. 505+96.00 (South Half)	61.60	
	Total Length of Roadway - Div. 2	2,505.47	0.474
	Total Length of Bridges - Div. 2	193.90	0.037
	Total Length of Div. 2	2,699.37	0.511
3	URBAN: (City of Eldridge)		
	Sta. 505+83.00 to Sta. 666+00.00	16,017.00	
	Bridges at Sta. 505+96.00 (North Half)	61.60	
	Bridge at Sta. 545+86.00 (R.C.B.)	26.51	
	Equation: Sta. 547+32.19 = Sta. 547+20.63 (Lengthens Line)	11.56	
	Bridges at Sta. 640+66.91	171.00	
	Total Length of Roadway - Div. 3	15,769.45	2.987
	Total Length of Bridges - Div. 3	259.11	0.049
	Total Length of Div. 3	16,028.56	3.036
	Total Length of Roadway in Project	21,781.05	4.125
	Total Length of Bridges in Project	930.51	0.176
	Total Length of Project	22,711.56	4.301

REV
* 45 *

INDEX OF SHEETS

NO.	DESCRIPTION
1	TITLE SHEET
1A	REVISION SHEET
2-3	ESTIMATE SHEET
4-~~32~~ 33	BRIDGE DESIGN NO. 880
33-61	BRIDGE DESIGN NO. 980
62-84	BRIDGE DESIGN NO. 1080
85-108	BRIDGE DESIGN NO. 1180
109-125	BRIDGE DESIGN NO. 1280

CONSTRUCTION PLANS SHOWING PROJECT AS BUILT

Plan Preparation Supervised By: Bruce Kuehl
Resident Construction Engineer
Date 1-16-86 Iowa Reg. No. 8371

REVIEWED AND FORWARDED TO AMES

District Construction Engineer Date
One 50% Reduced and ~~Two~~ Full-Size Prints To Be Made and Returned To
R. C. Henely
District Engineer

AFTER MICROFILMING RETURN ORIGINAL
TO DISTRICT NO. 6

DEPARTMENT OF TRANSPORTATION, HIGHWAY DIVISION
STANDARDS REQUIRED (Available at Bridge Design Services)
STANDARD ISSUED REVISED

THIS AS BUILT PLAN INCLUDES

YEAR	WORK	CONTRACTOR	PROJ. INSPECTOR
1981	Bridge 880	Lunda	F. Springer
1981	Bridge 980	Lunda	F. Springer
1981	Bridge 1080	Lunda	M. Jackson
1981	Bridge 1180	Lunda	M. Jackson
1981	Bridge 1280	Lunda	M. Jackson

REVISED

SEE FOLLOWING SHEET 1A

DEPARTMENT OF TRANSPORTATION IOWA
Highway Division
AUTHORIZED FOR LETTING
Feb. 27, 1980
DEPUTY CHIEF ENGINEER DATE

I HEREBY CERTIFY THAT THIS PLAN WAS PREPARED UNDER MY SUPERVISION AND THAT ENGINEERING DECISIONS WITH REGARD TO THE DESIGN WERE MADE BY ME OR BY OTHER DULY REGISTERED PROFESSIONAL ENGINEERS UNDER THE LAWS OF THE STATE OF IOWA.
See Design Sheet 1 of each Design
IOWA REGISTRATION NUMBER DATE

U.S. DEPT. TRANSPORTATION
FEDERAL HIGHWAY ADMINISTRATION
APPROVED
DIVISION ENGINEER DATE

BRIDGES
FFD-561-1(2)--2N-82
SCOTT COUNTY

LETTING DATE APRIL 22, 1980 STATE CONTROL SECTION NUMBER 82-2500 FILE NO. 25588 SCOTT COUNTY PROJECT NO. FFD-561-1(2)--2N-82 SHEET NO. 1 OF 125

LISTING OF PROJECT REVISIONS

DATE	SHEET NUMBER	DESCRIPTION OF REVISIONS
3-6-81		Designs 880, 980, 1080 & 1180
	1A of ~~125~~ 130	This sheet added to project (Revision Sheet).
		Design 880
	5 of ~~125~~ 130	Reinforcing Steel and Epoxy Coated Reinforcing Steel quantities changed and/or corrected.
	9 of ~~125~~ 130	Pier Column Reinforcing changed.
	10 of ~~125~~ 130	Re-bar number and weight changed for Pier No. 1 and Pier No. 2
	13 of ~~125~~ 130	"Tabulation of Epoxy Coated Re-bars" corrected.
	16 of ~~125~~ 130	"Reinforcing Steel" list and "Total Estimated Quantities" list correcte.
	24 of ~~125~~ 130	Epoxy Coated re-bar list and Estimated Quanty list corrected.
		Design 980
	35 130 ~~34~~ of ~~125~~	Reinforcing Steel and Epoxy Coated Reinforcing Steel quantitites changed and/or corrected.
	39 130 ~~38~~ of ~~125~~	Pier Column reinforcing changed.
	40 130 ~~39~~ of ~~125~~	Reinforcing Bar list--Pier No. 2 changed. Total Estimated Quantities changed.
	43 130 ~~42~~ of ~~125~~	Weight corrected in tabulation of Epoxy Coated Re-bars.
	46 130 ~~45~~ of ~~125~~	Reinforcing Steel list and Total Estimated Quantities list corrected.
		Design 1080
	54 130 ~~53~~ of ~~125~~	Superstructure quantity for Epoxy Coated Reinforcing Steel corrected.
	-- 130 ~~75~~ of ~~125~~	Number and Weight of 5d1 reinforcing bars corrected.
		Design 1180
	88 130 ~~86~~ of ~~125~~	Pier quantity for Reinforcing Steel corrected.
	96 130 ~~93~~ of ~~125~~	Number and weight of 5c2 & 5c3 cap hoops corrected.
	97 130 ~~94~~ of ~~125~~	Number and weight of 4e1 column hoops corrected.
	2 of ~~125~~ 130	Designs 880 & 980---Reinforcing Steel weights changed and/or corrected.
	3 of ~~125~~ 130	Design 1080--Epoxy Coated Reinforcing Steel weight corrected.
		Design 1180--Reinforcing Steel weight corrected.
	1 of ~~125~~ 130	Sheet 1A added to "Index of Sheets."

REASON: On Designs 880 & 980 there was a design omission concerning the effects of cap shrinkage in designing the Piers. The redesign shows a need for additional reinforcing in the exterior columns of Piers No. 2 in both designs. All other corrections were due to plan errors.

	Reinforcing Steel	Epoxy Coated Reinforcing Steel
Design 880	+217	-57
Design 980	+1060	+4
Design 1080		+57
Design 1180	-64	

REVISION SHEET

FILE NO. 25588	SCOTT COUNTY	PROJECT NUMBER FFD-561-1(2)--2N-82	STATE IOWA	FED. ROAD DIST. NO. 5	FISCAL YEAR	SHEET NO. 1A	TOTAL SHEETS 125

IN LETTING OF April 1, 1980

DESIGN NO. 880 — OVER CM ST. P & P R.R. — STATION: 461 + 52.79
SCOTT COUNTY — R.R. CROSSING NO. 13272 — ℄ N.B. LANE
SECTION 36 — T-79N — R-3E — SHERIDAN TWP.

DESIGN FOR 57°03'00" SKEW
336'-0" X VARI. CONTINUOUS
WELDED PLATE GIRDER BRIDGE

FINAL ~~ESTIMATE OF~~ QUANTITIES

NO.	ITEM		UNIT	TOTAL	
1	Structural Concrete		Cu. Yds.	1,510.5	
2	Structural Steel		Lbs.	701,398	
3	Reinforcing Steel		Lbs.	~~215,596~~	215,813
4	Reinforcing Steel-Epoxy Coated		Lbs.	~~118,118~~	118,061
5	Creosoted Piling (25 FT)		Lin. Ft.	~~5,375~~	0
~~6~~ 6	HP10X42 Steel	Furnish	Lin. Ft.	~~4,615~~	5,212.1
7	Bearing Piling	Drive	Lin. Ft.	~~4,615~~	5,020.1
~~7~~ 8	Prebored Holes		Lin. Ft.	1,700	
~~8~~ 9	Granular Backfill		Cu. Yds.	564.2	
~~9~~ 10	Class 20 Excavation		Cu. Yds.	1,021	
~~10~~ 11	Concrete Barrier Rail		Lin. Ft.	747.5	
~~11~~ 12	Subdrain		Lin. Ft.	311.5	
~~12~~ 13	Bridge Seat Sealer		Sq. Ft.	~~1,004~~	1,011.136
~~13~~ 14	Concrete Slope Protection		Sq. Yds.	~~1,699~~	1,630.3
8001	Field Splices		Ea.	64	
8002	Creosoted Piling (40 FT)		Lin. Ft.	8,517.3	
8003	Piling Ordered But Not Driven (25')		Lin. Ft.	6,375	
8004	Test Pile Loading		#	1,500.00	
8005	Retarder		Cu. Yds.	559.1	

~~ESTIMATE~~ REFERENCE INFORMATION 100-4

Data listed below is for informational purposes only and ~~shall~~ will not constitute a basis for any extra work orders.

ITEM NO.	DESCRIPTION
1.	Includes 951.4 Cu. Yds. of Structural Concrete Class "C" for Substructure and 559.1 Cu. Yds. of Structural Concrete, Class "D" for Superstructure.
2.	Includes 606 Lbs. for Lead Plate and 1,408 Lbs. for Drains.

IN LETTING OF April 1, 1980

DESIGN NO. 980 — OVER CM ST. P & P R.R. — STATION: 462 + 88.56
SCOTT COUNTY — R.R. CROSSING NO. 13272 — ℄ S.B. LANE
SECTION 36 — T-79N — R-3E — SHERIDAN TWP.

DESIGN FOR 57°03'00" SKEW
336'-0" X VARI. CONTINUOUS
WELDED PLATE GIRDER BRIDGE

FINAL ~~ESTIMATE OF~~ QUANTITIES

NO.	ITEM		UNIT	TOTAL	
16	Structural Concrete		Cu. Yds.	1481.1	
~~2~~ 17	Structural Steel		Lbs.	719,075	
~~3~~ 18	Reinforcing Steel		Lbs.	~~218,793~~	219,853
~~4~~ 19	Reinforcing Steel - Epoxy Coated		Lbs.	~~120,859~~	120,863
~~5~~ 20	Creosoted Piling (25 FT)		Lin. Ft.	~~5250~~	75
~~6~~ 21	HP 10X42 Steel	Furnish	Lin. Ft.	~~5192~~	5,566
~~7~~ 22	Bearing Piling	Drive	Lin. Ft.	~~5192~~	5,487.8
~~7~~ 23	Prebored Holes		Lin. Ft.	1800	
~~8~~ 24	Subdrain		Lin. Ft.	306	
~~9~~ 25	Bridge Seat Sealer		Sq. Ft.	990	1,023.345
~~10~~ 26	Granular Backfill		Cu. Yds.	520	
~~11~~ 27	Class 20 Excavation		Cu. Yds.	836	
~~12~~ 28	Concrete Barrier Rail		Lin. Ft.	794.5	
~~13~~ 29	Concrete Slope Protection		Sq. Yds.	~~1721~~	1,611.8
8001	Field Splices		Ea.	40	
8002	Creosoted Piling (40 FT)		Lin. Ft.	8,314.3	
8003	Piling Ordered But Not Driven (25 FT)		Lin. Ft.	5,175	
8004	Test Piling		#	4,514.58	
8005	Retarder		Cu. Yds.	382.5	
8007	Tie Lines				
8008	Special Shoring within RR ROW				

~~ESTIMATE~~ REFERENCE INFORMATION 100-4

Data listed below is for informational purposes only and ~~shall~~ will not constitute a basis for any extra work orders.

ITEM NO.	DESCRIPTION
16	Includes 924.3 Cu. Yds. of Structural Concrete Class "C" For Substructure and 556.8 Cu. Yds. of Structural Concrete, Class "D" for Superstructure.
~~2~~ 17	Includes 614 Lbs. for Lead Plates & 1692 Lbs. for Drains.
8007 & 8008	See Sheet No 4 of 125.

QUANTITY ~~ESTIMATE~~ SHEET

Revised 03-06-81: Designs 880 & 980 — Reinforcing weights changed and/or corrected.

FILE NO. 25588 — SCOTT COUNTY

PROJECT NUMBER	STATE	FED. ROAD DIST. NO.	FISCAL YEAR	SHEET NO.	TOTAL SHEETS
FFD-561-1(2)--2N-82	IOWA	5		2	125

BRIDGE WORK SHEET

CORRECTED PLANS

THIS AS BUILT PLAN INCLUDES			
YEAR	WORK	CONTRACTOR	PROJ. INSPECTOR
1981	Bridge	Lunda	F. Springer

Sta. 464+54.14 25.5' Lt. & Mod. IHCRM Top N.E. Wingwall Elev. 773.40

BENCH MARK NO. 53 STA. 458+15-304' RT.
R.R. SPK. W. SIDE PO. POLE AT R.R. TRACK--EL. 743.13

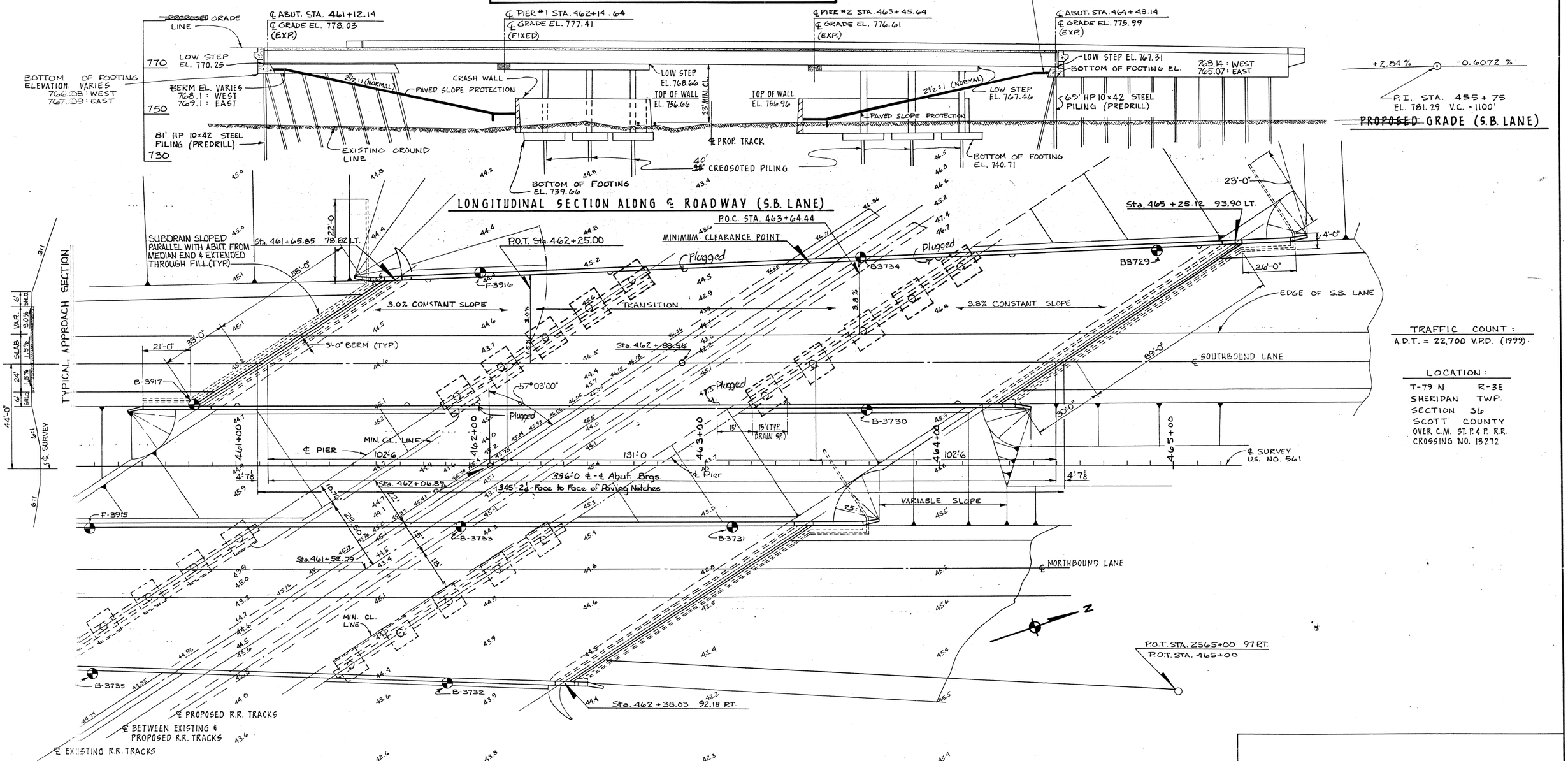

SITUATION PLAN

TRAFFIC COUNT:
A.D.T. = 22,700 V.P.D. (1999)

LOCATION:
T-79 N R-3E
SHERIDAN TWP.
SECTION 36
SCOTT COUNTY
OVER C.M. ST. P. & P. R.R.
CROSSING NO. 13272

I HEREBY CERTIFY THAT THESE PLANS AND SPECIFICATIONS WERE PREPARED BY ME OR UNDER MY DIRECT SUPERVISION AND THAT I AM A DULY REGISTERED PROFESSIONAL ENGINEER UNDER THE LAWS OF THE STATE OF IOWA

Richard E. Witter

DATE FEB. 26, 1979 REGIST. NO. 3810

RICHARD E. WITTER REGISTERED No. 3810 STATE OF IOWA PROFESSIONAL ENGINEER

DESIGN FOR 57°03'00" SKEW
336'-0" X VARI. CONTINUOUS
WELDED PLATE GIRDER BRIDGE
102'-6" END SPANS 131'-0" INTERIOR SPAN
SITUATION PLAN
STATION: 462+88.56 (℄ S.B. LANE, U.S. NO. 561) NOV. 1978
SCOTT COUNTY
IOWA DEPARTMENT OF TRANSPORTATION-HIGHWAY DIVISION
DESIGN SHEET NO. 1 OF 29 FILE NO. 25588 DESIGN NO. 980

W. EYER

SCOTT COUNTY	PROJECT NUMBER	STATE	FED. ROAD DIST. NO.	FISCAL YEAR	SHEET NO.	TOTAL SHEETS
	FED-561-1(2)--2N-82	IOWA	5		33	125

BENCH MARK NO. 53 STA. 458+15-304' RT.
R.R. SPK. W. SIDE PO. POLE AT R.R. TRACK--EL. 743.13

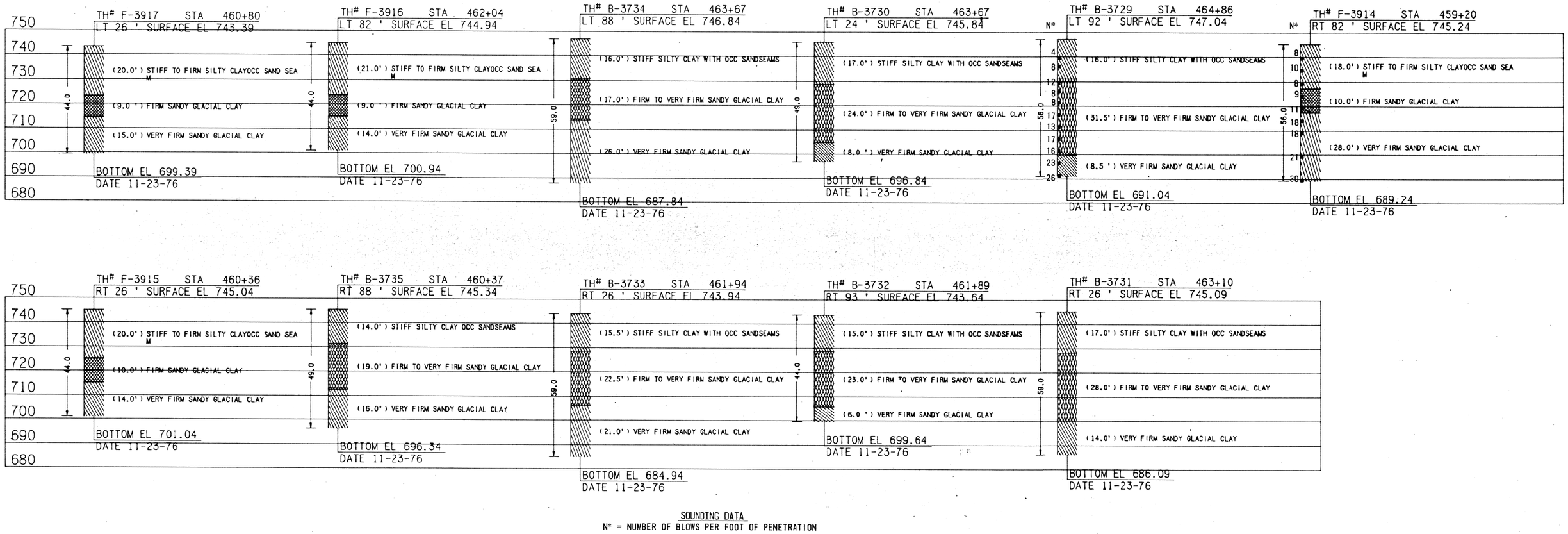

SOUNDING DATA
N* = NUMBER OF BLOWS PER FOOT OF PENETRATION

GENERAL NOTES:

THIS BRIDGE IS DESIGNED FOR HS20-44 LOADING, PLUS 20 LBS. PER SQUARE FOOT OF ROADWAY FOR FUTURE WEARING SURFACE.

THE BRIDGE CONTRACTOR ~~IS TO~~ INSTALL SUBDRAINS BEHIND EACH ABUTMENT AS DETAILED. THE SUBDRAIN ~~MAY BE EITHER~~ DRAIN TILE OR ~~PERFORATED PLASTIC PIPE~~ WITH A ~~MINIMUM~~ NOMINAL DIAMETER OF 4" ~~AND A MAXIMUM NOMINAL DIAMETER OF 6"~~. THE PRICE BID FOR "SUBDRAIN" ~~IS TO~~ INCLUDE THE EXCAVATION NECESSARY FOR THE INSTALLATION.

THE APPROACH FILLS AS SHOWN ~~ARE~~ WERE NOT A PART OF THIS CONTRACT, BUT ~~ARE TO BE~~ IN PLACE BEFORE ABUTMENT PILES ~~ARE~~ were DRIVEN. THE BRIDGE CONTRACTOR ~~IS TO~~ LEVEL OFF AND SHAPE THE BERMS TO THE ELEVATIONS AND DIMENSIONS SHOWN. ~~DRESSING OF~~ SLOPES OUTSIDE THE BRIDGE AREA NOT DISTURBED BY THE BRIDGE CONTRACTOR ~~SHALL BE PAID FOR AS EXTRA WORK~~.

ABUTMENT PILES ARE ~~TO BE~~ DRIVEN IN OVERSIZE HOLES DRILLED THROUGH THE FILL TO EL.741.08 AT THE SOUTH ABUTMENT AND TO EL.738.14 AT THE NORTH ABUTMENT. THE MINIMUM DIAMETER OF THE DRILLED HOLES IS ~~TO BE~~ 18 INCHES. THESE DRILLED HOLES ~~ARE TO BE~~ MAINTAINED OPEN DURING DRIVING OF THE PILES TO THE EXTENT THAT CASING OR DRILLING MUD ~~MAY BE~~ were REQUIRED FOR COLLAPSING SOILS. IMMEDIATELY AFTER DRIVING A PILE, THE VOID AROUND THE PILE ~~IS TO BE~~ FILLED WITH LOOSE DRY SAND. ANY DRILLING MUD USED ~~SHALL BE~~ REMOVED FROM THE HOLE PRIOR TO PLACING THE SAND.

PIER EXCAVATION ~~IS~~ WAS BASED ON THE ~~ASSUMPTION THAT THE~~ APPROACH FILLS ~~WILL HAVE BEEN~~ COMPLETED PRIOR TO STARTING CONSTRUCTION OF THE PIERS.

BRIDGE SEAT SEALER ~~IS TO BE~~ APPLIED TO ALL EXPOSED BRIDGE SEAT SURFACES AT THE ABUTMENTS. THE BRIDGE SEAT SURFACE ~~IS TO~~ INCLUDE ALL SURFACES OF THE BRIDGE SEAT STEPS, THE WASH BETWEEN STEPS AND THE EDGE FILLETS. THE SEALER ~~IS TO~~ EXTEND SIX INCHES UP THE FRONT FACE OF THE BACKWALL. THE SEALER ~~IS~~ WAS ALSO ~~TO BE~~ APPLIED TO THE TOP OF THE BACKWALL. THE BRIDGE SEAT PROTECTIVE COATING ~~SHALL BE~~ was AN APPROVED SEALER PER MATERIALS I.M. 491.12 AND APPLIED IN ACCORDANCE WITH THE MANUFACTURER'S RECOMMENDATIONS.

GUARD RAIL ~~WILL BE~~ PLACED BY OTHERS.

SPECIFICATIONS:

DESIGN: A.A.S.H.T.O. SERIES OF 1977.

CONSTRUCTION: IOWA DEPARTMENT OF TRANSPORTATION STANDARD SPECIFICATIONS, SERIES OF 1977. WITH CURRENT SPECIAL PROVISIONS AND SUPPLEMENTAL SPECIFICATIONS.

DESIGN STRESSES:

DESIGN STRESSES FOR THE FOLLOWING MATERIALS ARE IN ACCORDANCE WITH A.A.S.H.T.O. STANDARD SPECIFICATIONS FOR HIGHWAY BRIDGES, SERIES OF 1977.

CONCRETE IN ACCORDANCE WITH SECTION 1.5, f'c= 3,500 P.S.I.

REINFORCING STEEL IN ACCORDANCE WITH SECTION 1.5, Grade 40 and Grade 60.

STRUCTURAL STEEL IN ACCORDANCE WITH SECTION 1.7, ASTM A-36, fatigue stress cycles based on Case II.

~~TOTAL ESTIMATED~~ FINAL BRIDGE QUANTITIES

ITEM NO.	ITEM		UNITS	2 ABUTS.	2 PIERS	1 SUPERSTR.	TOTAL	
1	STRUCTURAL CONCRETE		CU. YDS.	293.5	630.6	556.8	1481.1	
2	STRUCTURAL STEEL		LBS.	-		719,075	719,075	
3	REINFORCING STEEL		LBS. 18,548	~~18,535~~	~~112,387~~ 113,429	87,876	~~218,793~~	214,553
4	REINFORCING STEEL-EPOXY COATED		LBS. 12,404	~~12,400~~	-	108,459	~~120,859~~	120,863
5	CREOSOTED PILING		LIN. FT.	- 8,314.3	~~5250~~	-	~~5250~~	8314.3
6	HP 10X42 STEEL BEARING PILING	FURNISH	LIN. FT. 5,566	~~5192~~	-	-	~~5192~~	5,566
		DRIVE	LIN. FT. 5,487.8	~~5192~~	-	-	~~5192~~	5,487.8
7	PREBORED HOLES		LIN. FT.	1800	-	-	1800	
8	SUBDRAIN		LIN. FT.	306	-	-	306	
9	BRIDGE SEAT SEALER		SQ. FT. 1,023	~~990~~		-	~~990~~	1,023
10	GRANULAR BACKFILL		CU. YDS.	520	-	-	520	
11	CLASS 20 EXCAVATION		CU. YDS.	346	490	-	836	
12	CONCRETE BARRIER RAIL		LIN. FT.	- -	-	794.5	794.5	
13	CONCRETE SLOPE PROTECTION		SQ. YDS.	-	-	-	~~1721~~	1,611.8

~~ESTIMATE~~ REFERENCE INFORMATION:

ITEM NO. 1: INCLUDES 924.3 CU. YDS. OF STRUCTURAL CONCRETE CLASS "C" FOR SUBSTRUCTURE AND 556.8 CU. YDS. OF STRUCTURAL CONCRETE, CLASS "D" FOR SUPERSTRUCTURE.

ITEM NO. 2: INCLUDES 614 LBS. FOR LEAD PLATES & 1692 LBS. FOR DRAINS.

DESIGN FOR 57°03'00" SKEW
336'-0" X VARI. CONTINUOUS
WELDED PLATE GIRDER BRIDGE
102'-6" END SPANS 131'-0" INTERIOR SPAN
SOUNDING DATA & QUANTITIES
STATION: 462 + 88.56 (℄ S.B. LANE, U.S. NO. 561) NOV. 1978
SCOTT COUNTY
IOWA DEPARTMENT OF TRANSPORTATION-HIGHWAY DIVISION
DESIGN SHEET NO. 2 OF 29 FILE NO. 25588 DESIGN NO. 980

Revised 3-6-81: Reinforcing Steel and Epoxy Coated Reinforcing Steel quantities changed and/or corrected.

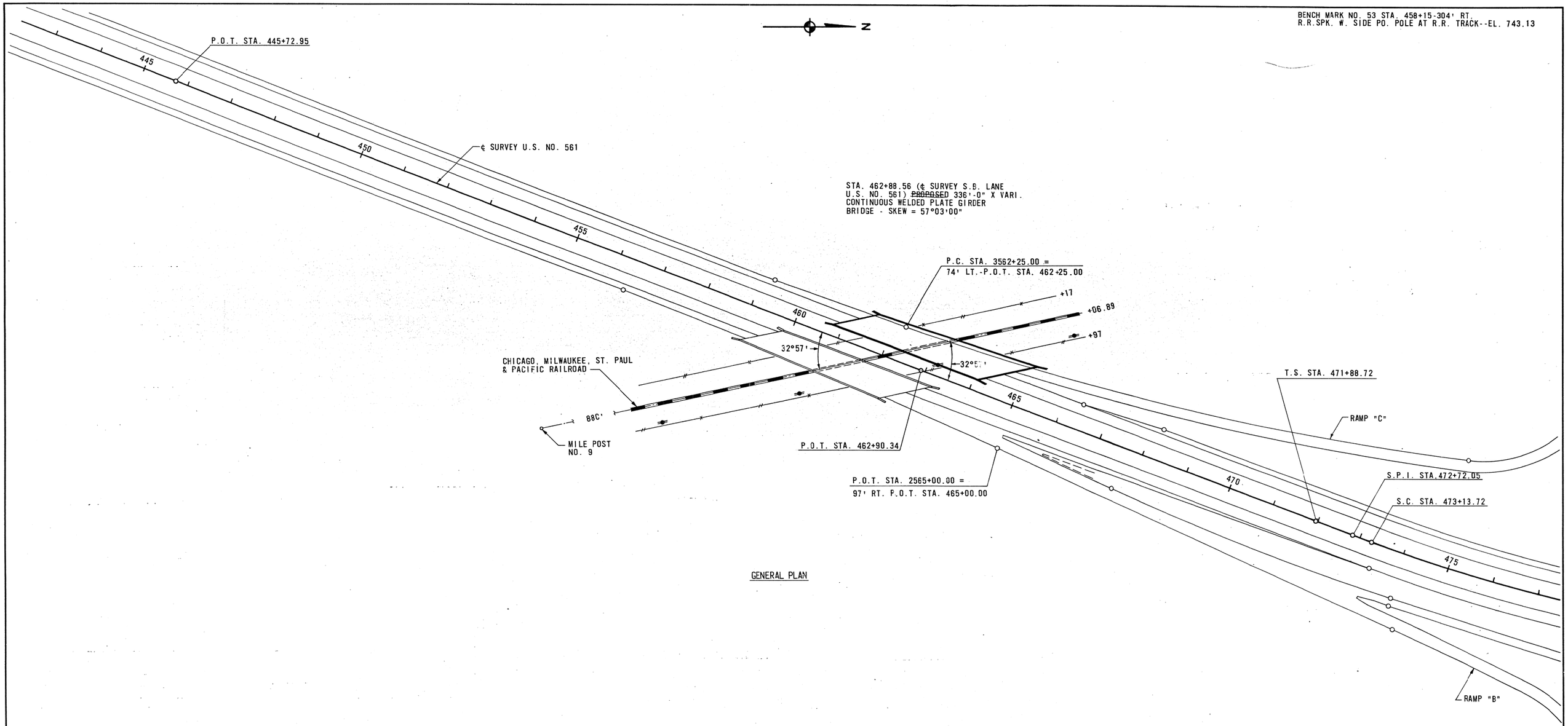

GENERAL PLAN

DESIGN FOR 57°03'00"SKEW
336'-0" X VARI. CONTINUOUS
WELDED PLATE GIRDER BRIDGE
102'-6" END SPANS 131'-0" INTERIOR SPAN
GENERAL PLAN
STATION: 462+88.56 (℄ S.B. LANE, U.S. NO. 561) NOV.1978
SCOTT COUNTY
IOWA DEPARTMENT OF TRANSPORTATION-HIGHWAY DIVISION
DESIGN SHEET NO. 3 OF 29 FILE NO. 25588 DESIGN NO. 980

SCOTT COUNTY

PROJECT NUMBER	STATE	FED. ROAD DIST. NO.	FISCAL YEAR	SHEET NO.	TOTAL SHEETS
	IOWA	5		35	125

BENCH MARK NO. 53 STA. 458+15-304' RT.
R.R. SPK. W. SIDE PO. POLE AT R.R. TRACK--EL. 743.13

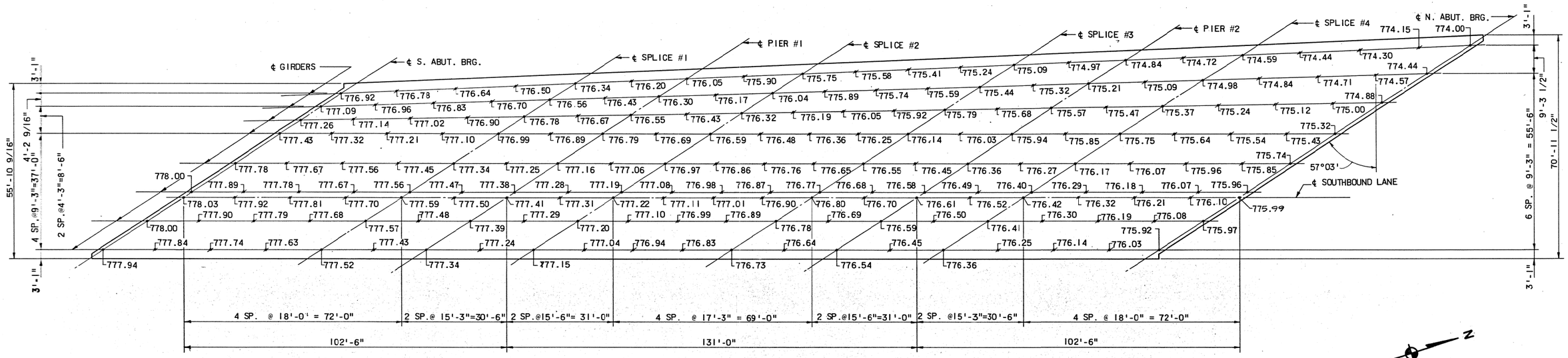

TOP OF SLAB ELEVATIONS

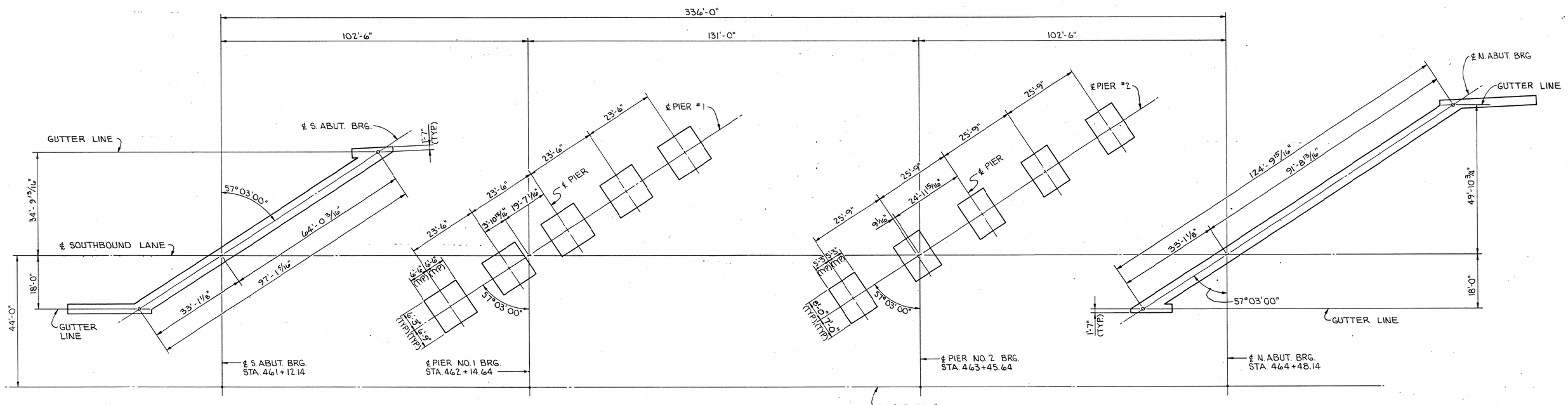

STAKING DIAGRAM

DESIGN FOR 57°03'00" SKEW
336'-0" X VARI. CONTINUOUS
WELDED PLATE GIRDER BRIDGE
102'-6" END SPANS 131'-0" INTERIOR SPAN
STAKING DIAGRAM & SLAB ELEVATIONS
STATION: 462+88.56 (℄ S.B. LANE, U.S. NO. 561) NOV.1978
SCOTT COUNTY
IOWA DEPARTMENT OF TRANSPORTATION-HIGHWAY DIVISION
DESIGN SHEET NO. 4 OF 29 FILE NO. 25588 DESIGN NO. 980

SCOTT COUNTY	PROJECT NUMBER	STATE	FED. ROAD DIST. NO.	FISCAL YEAR	SHEET NO.	TOTAL SHEETS
		IOWA	5		36	125

BENCH MARK NO. 53 STA. 458+15-304' RT.
R.R. SPK. W. SIDE PO. POLE AT R.R. TRACK-
EL. 743.13

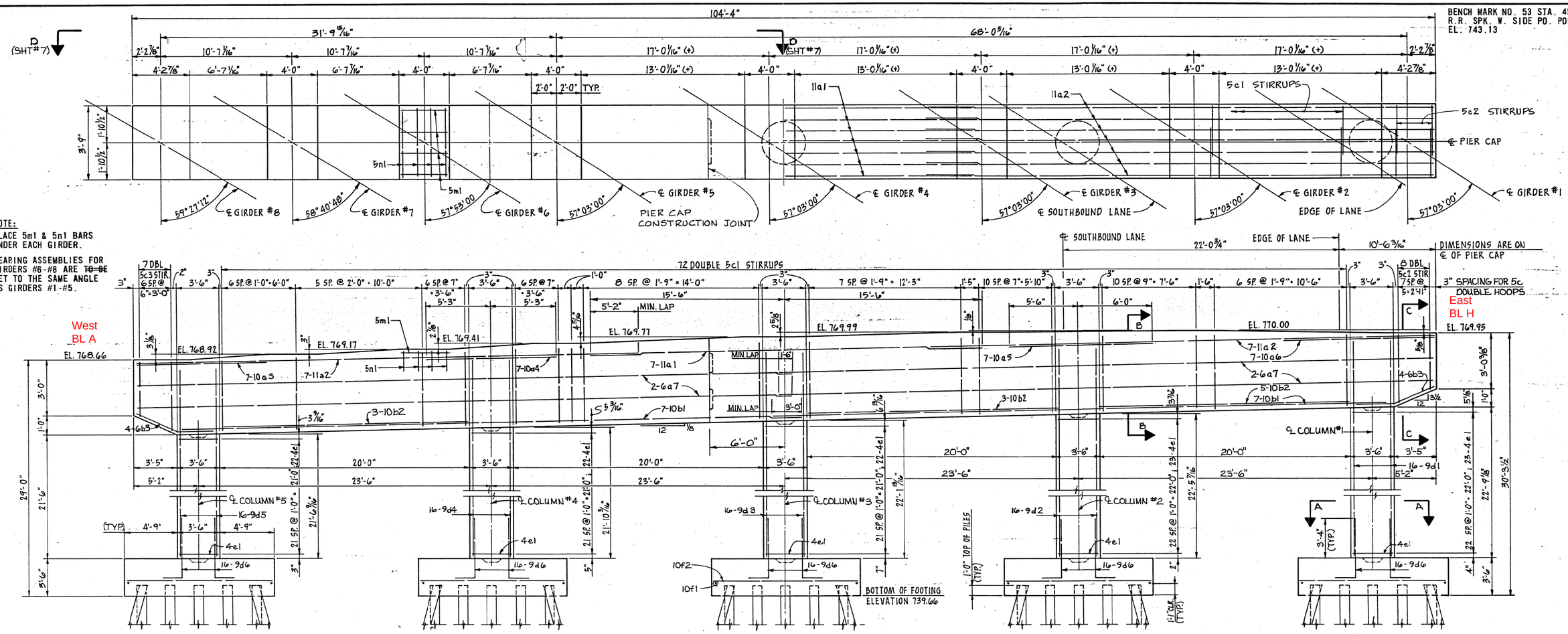

NOTE:
PLACE 5m1 & 5n1 BARS UNDER EACH GIRDER.

BEARING ASSEMBLIES FOR GIRDERS #6-#8 ARE ~~TO BE~~ SET TO THE SAME ANGLE AS GIRDERS #1-#5.

PIER ELEVATION
(LOOKING NORTH)

NOTE:
SEE SHEET #7 FOR CRASH WALL REINFORCING AND DETAILS.
SEE SHEET #7 FOR PIER CAP CONSTRUCTION JOINT DETAILS.

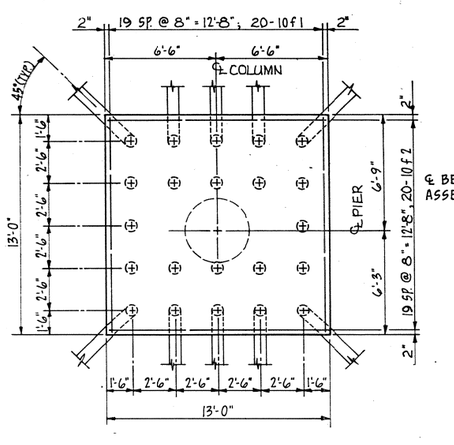

FOOTING PLAN

NOTE: ALL DIMENSIONS ARE AT BOTTOM OF FOOTING. BATTER PILES 1:4 IN DIRECTION INDICATED. 22 CREOSOTED PILING ~~REQUIRED~~ FOR EACH FOOTING.

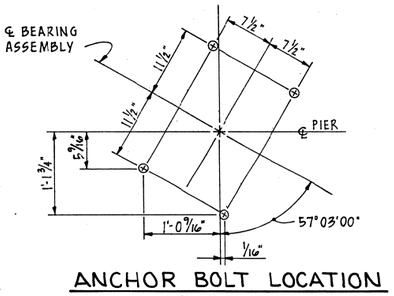

ANCHOR BOLT LOCATION
(FIXED)
1½" Φ x 2'-0" SWEDGE ANCHOR BOLTS
PROJECTION = 5"

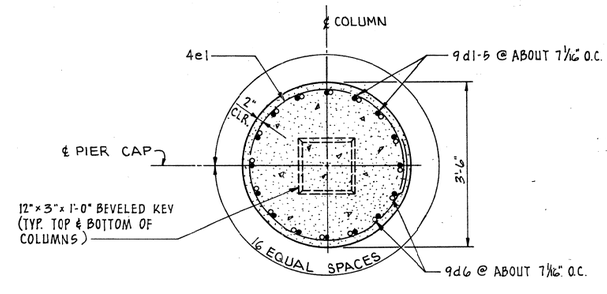

SECTION A-A

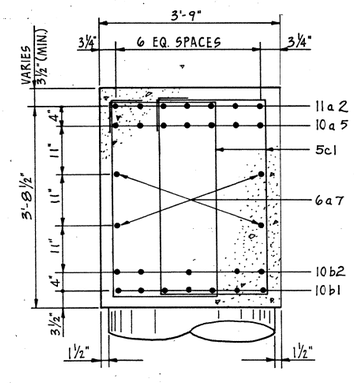

SECTION B-B

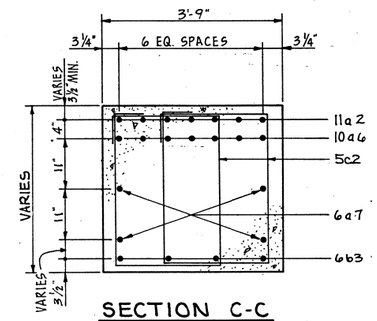

SECTION C-C

DESIGN FOR 57°03'00" SKEW
336'-0" X VARI. CONTINUOUS
WELDED PLATE GIRDER BRIDGE
102'-6" END SPANS 131'-0" INTERIOR SPAN
PIER NO. 1
STATION: 462+88.56 (℄ S.B. LANE, U.S. NO. 561) NOV. 1978
SCOTT COUNTY
IOWA DEPARTMENT OF TRANSPORTATION-HIGHWAY DIVISION
DESIGN SHEET NO. 5 OF 29 FILE NO. 25588 DESIGN NO. 980

SCOTT COUNTY	PROJECT NUMBER	STATE	FED. ROAD DIST. NO.	FISCAL YEAR	SHEET NO.	TOTAL SHEETS
		IOWA	5		27	155

BENCH MARK NO. 53 STA. 458+15-304' RT.
R.R. SPK. W. SIDE PO. POLE AT R.R. TRACK
EL. 743.13

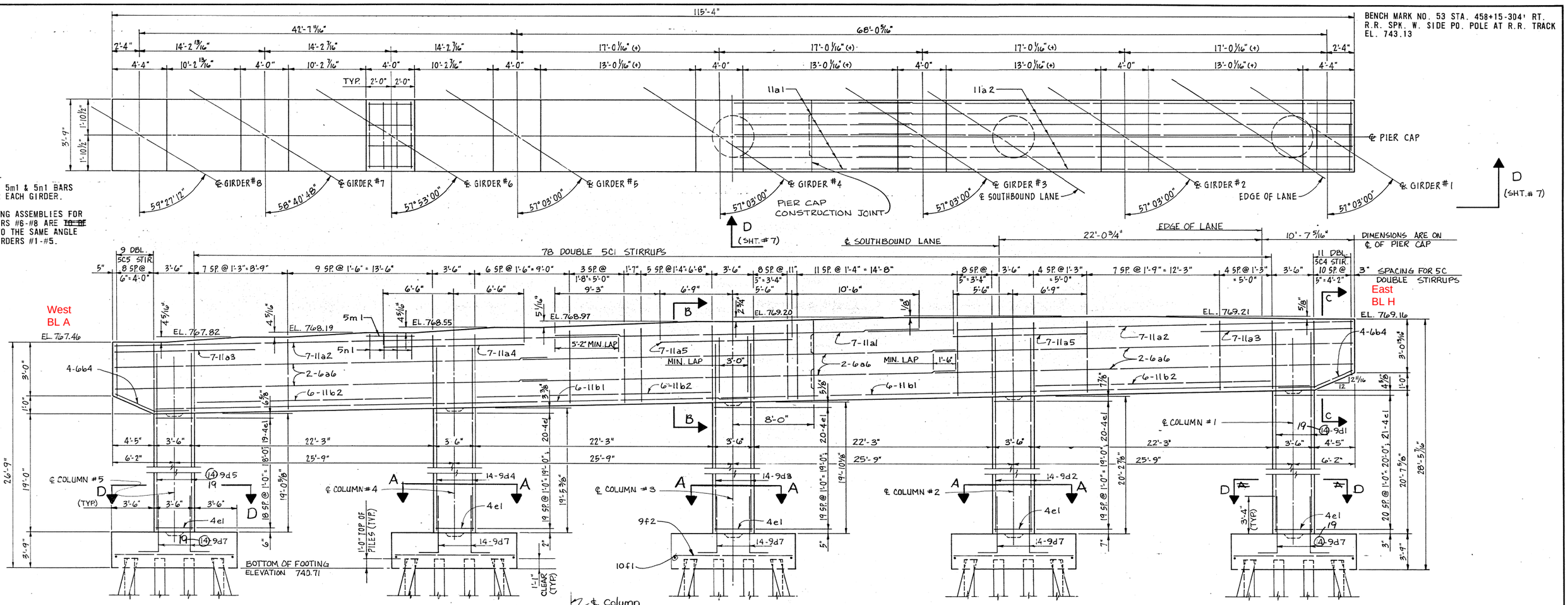

NOTE:

PLACE 5m1 & 5n1 BARS UNDER EACH GIRDER.

BEARING ASSEMBLIES FOR GIRDERS #6-#8 ARE ~~TO BE~~ SET TO THE SAME ANGLE AS GIRDERS #1-#5.

PIER ELEVATION

(LOOKING NORTH)

NOTE:

SEE SHEET #7 FOR CRASH WALL REINFORCING AND DETAILS.
SEE SHEET #7 FOR PIER CAP CONSTRUCTION JOINT DETAILS.

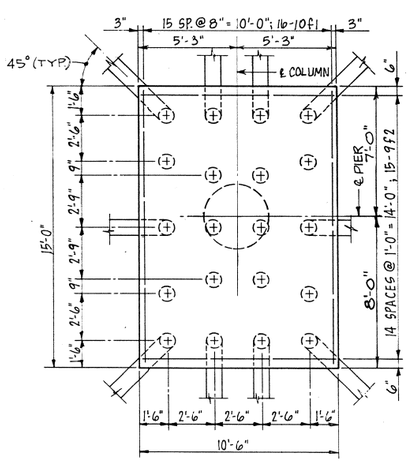

FOOTING PLAN

NOTE: ALL DIMENSIONS ARE AT BOTTOM OF FOOTING. BATTER PILES 1:4 IN DIRECTION INDICATED. 20 CREOSOTED PILING ~~REQUIRED~~ FOR EACH FOOTING.

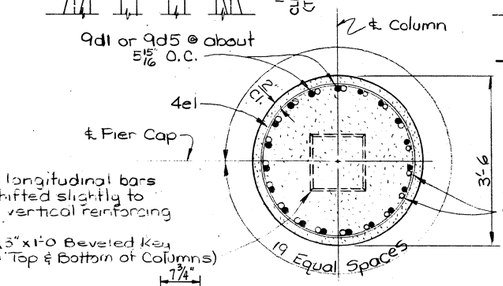

Note: Pier cap longitudinal bars 11b ~~may be~~ shifted slightly to clear column vertical reinforcing

12" x 3" x 1'-0 Beveled Key (Typ Top & Bottom of Columns)

SECTION D-D

(EXTERIOR COLUMNS ONLY)

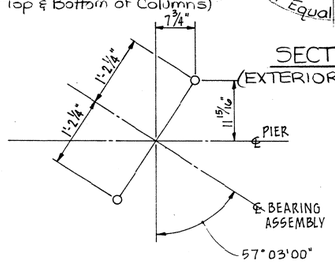

ANCHOR BOLT LOCATION

(EXPANSION)
1½" Φ x 2'-0" SWEDGE ANCHOR BOLTS
PROJECTION = 5½"

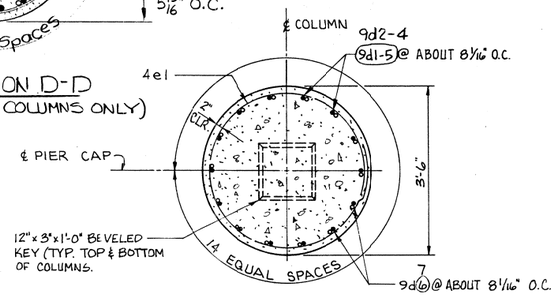

SECTION A-A

(INTERIOR COLUMNS ONLY)

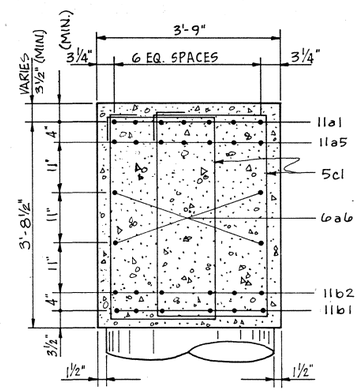

SECTION B-B

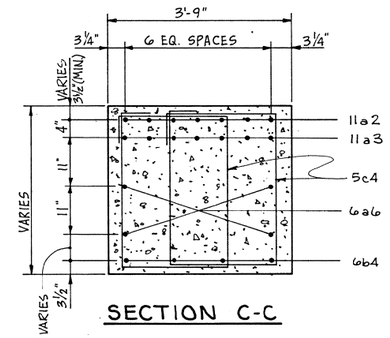

SECTION C-C

DESIGN FOR 57°03'00" SKEW
336'-0" X VARI. CONTINUOUS
WELDED PLATE GIRDER BRIDGE
102'-6" END SPANS 131'-0" INTERIOR SPAN
PIER NO. 2
STATION: 462+88.56 (℄ S.B. LANE, U.S. NO. 561) NOV. 1978
SCOTT COUNTY
IOWA DEPARTMENT OF TRANSPORTATION-HIGHWAY DIVISION
DESIGN SHEET NO. 6 OF 29 FILE NO. 25588 DESIGN NO. 980

Revised: 03-26-81 Pier Column Reinforcing Changed.

SCOTT COUNTY	PROJECT NUMBER	STATE	FED. ROAD DIST. NO.	FISCAL YEAR	SHEET NO.	TOTAL SHEETS
		IOWA	5		38	125

7087-50

BENCH MARK NO. 53 STA. 458+15-304' RT.
R.R. SPK. W. SIDE PO. POLE AT R.R. TRACK--EL. 743.13

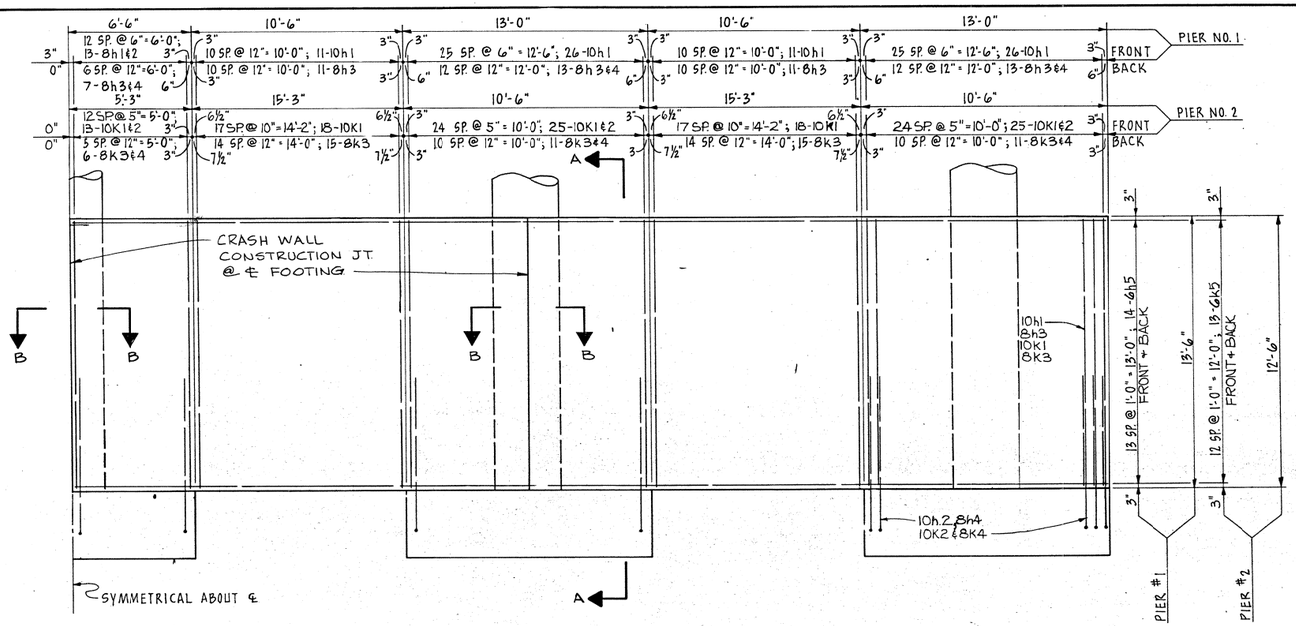

CRASH WALL ELEVATION
(FRONT VIEW)
SECTION D-D

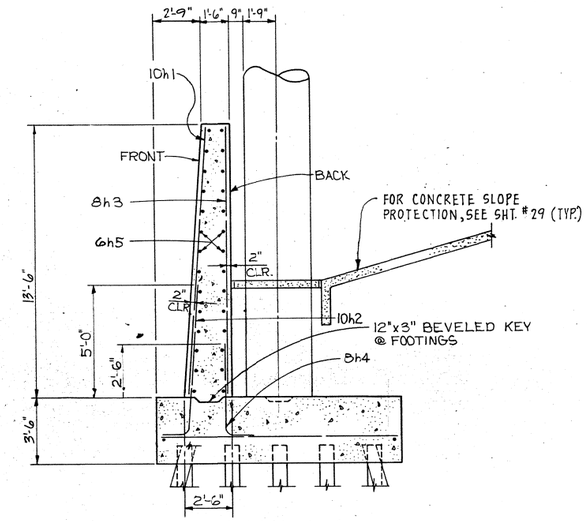

SECTION A-A
PIER NO. 1

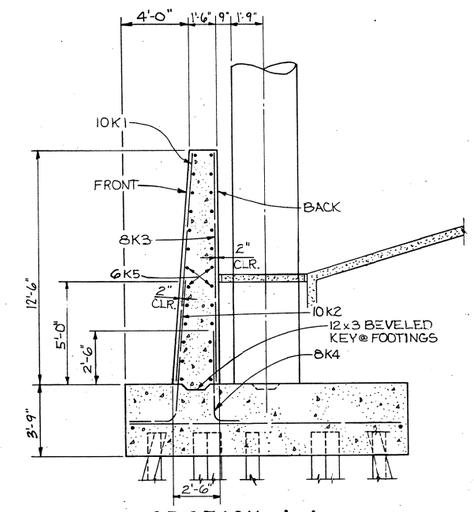

SECTION A-A
PIER NO. 2

REINFORCING BAR LIST - PIER NO. 1

BAR	LOCATION	SHAPE	NO.	LENGTH	WEIGHT
11a1	PIER CAP, TOP, LONGIT.	—	7	31'-0"	1153
11a2	PIER CAP, TOP, LONGIT.	—	14	41'-8"	3099
10a3	PIER CAP, TOP, LONGIT.	—	7	10'-6"	316
10a4	PIER CAP, TOP, LONGIT.	—	7	10'-6"	316
10a5	PIER CAP, TOP, LONGIT.	—	7	11'-5"	346
10a6	PIER CAP, TOP, LONGIT.	—	7	12'-0"	361
6a7	PIER CAP, SIDES, LONGIT.	—	8	52'-9"	634
10b1	PIER CAP, BOT. LONGIT.	—	14	50'-2"	3027
10b2	PIER CAP, BOT. LONGIT.	—	11	20'-1"	947
6b3	PIER CAP, CANTILEVER	—	8	5'-7"	67
5c1	PIER CAP, HOOPS	▭	144	12'-6"	1877
5c2	PIER CAP, HOOPS, CANT.	▭	16	11'-5"	191
5c3	PIER CAP, HOOPS, CANT.	▭	14	11'-6"	168
9d1	COLUMN #1, VERTICAL	—	16	25'-9"	1401
9d2	COLUMN #2, VERTICAL	—	16	25'-6"	1387
9d3	COLUMN #3, VERTICAL	—	16	25'-2"	1369
9d4	COLUMN #4, VERTICAL	—	16	24'-11"	1355
9d5	COLUMN #5, VERTICAL	—	16	24'-7"	1337
9d6	COLUMNS TO FTGS., DOWELS	L	80	6'-6"	1768
4e1	COLUMN HOOPS	⬭	112	10'-10"	811
10f1	FOOTINGS, TRANSVERSE	—	100	12'-8"	5450
10f2	FOOTINGS, LONGITUDINAL	—	100	12'-8"	5450
10h1	CRASH WALL, VERTICAL	—	174	13'-2"	9858
10h2	WALL TO FTG., DOWELS	L	130	8'-2"	4568
8h3	CRASH WALL, VERTICAL	—	109	13'-2"	3832
8h4	WALL TO FTGS., DOWELS	L	65	5'-3"	911
6h5	CRASH WALL, HORIZONTAL	—	56	54'-0	4542
5m1	BEAM STEPS, LONGITUDINAL	—	32	3'-8"	122
5n1	BEAM STEPS, TRANSVERSE	⊓	32	5'-9"	192
				TOTAL (LBS.)	56,855

REINFORCING BAR LIST - PIER NO. 2

BAR	LOCATION	SHAPE	NO.	LENGTH	WEIGHT
11a1	PIER CAP, TOP, LONGIT.	—	7	32'-0"	1190
11a2	PIER CAP, TOP, LONGIT.	—	14	46'-8"	3471
11a3	PIER CAP, TOP, LONGIT.	—	14	13'-6"	1004
11a4	PIER CAP, TOP LONGIT.	—	7	13'-0"	483
11a5	PIER CAP, TOP LONGIT.	—	14	12'-3"	911
6a6	PIER CAP, SIDES, LONGIT.	—	12	39'-4"	709
11b1	PIER CAP, BOT. LONGIT.	—	12	54'-9"	3491
11b2	PIER CAP, BOT. LONGIT.	—	18	22'-3"	2128
6b4	PIER CAP, CANTILEVER	—	8	6'-7"	79
5c1	PIER CAP HOOPS	▭	156	12'-6"	2034
5c4	PIER CAP, HOOPS, CANT.	▭	22	11'-6"	264
5c5	PIER CAP, HOOPS, CANT.	▭	18	11'-7"	217
9d1	COLUMN #1, VERTICAL	—	~~19~~ 20	23'-8"	~~1127~~ 1529
9d2	COLUMN #2, VERTICAL	—	14	23'-3"	1107
9d3	COLUMN #3, VERTICAL	—	14	~~23'-8"~~	~~1047~~ 1087
9d4	COLUMN #4, VERTICAL	—	14	22'-6"	1071
9d5	COLUMN #5, VERTICAL	—	~~19~~ 14	22'-1"	~~1051~~ 1427
9d7	COLUMNS TO FTGS., DOWELS	L	~~20~~ 80	6'-9"	~~1007~~ 1836
4e1	COLUMN HOOPS	⬭	100	10'-10"	724
10f1	FOOTINGS, TRANSVERSE	—	80	14'-8"	5049
9f2	FOOTINGS, LONGITUDINAL	—	75	10'-2"	2593
10k1	CRASH WALL, VERTICAL	—	197	12'-2"	10,314
10k2	WALL TO FTG., DOWELS	L	125	8'-5"	4527
8k3	CRASH WALL, VERTICAL	—	115	12'-2"	3736
8k4	WALL TO FTG., DOWELS	L	55	5'-6"	808
6k5	CRASH WALL, HORIZONTAL	—	52	57'-3"	4471
5m1	BEAM STEPS, LONGITUDINAL	—	32	3'-8"	122
5n1	BEAM STEPS, TRANSVERSE	⊓	32	5'-9"	192
				TOTAL (LBS.)	~~55,527~~ 56,574

NOTE:
CONTRACTOR ~~HAS~~ HAD THE OPTION TO SPLICE BARS OVER 40'-0" LONG AT ANY SPLICE LOCATIONS ~~ARE TO BE~~ APPROVED BY THE ENGINEER. PAYMENT FOR REINFORCING BARS ~~SHALL BE~~ WERE BASED ON NO SPLICES AND NO ALLOWANCE ~~SHALL BE~~ WAS MADE FOR THE ADDITIONAL LENGTH OF BAR REQUIRED FOR THE USE OF SPLICES

CONCRETE PLACEMENT QUANTITIES

LOCATION	PIER NO. 1	PIER NO. 2
PIER CAP	61.8	69.3
COLUMN NO. 1	8.1	7.4
COLUMN NO. 2	8.0	7.2
COLUMN NO. 3	7.9	7.1
COLUMN NO. 4	7.8	6.9
COLUMN NO. 5	7.7	6.8
PIER FOOTINGS	106.3	106.4
CRASH WALL	107	105.1
TOTAL (C.Y.)	314.6	316.2

FINAL ~~TOTAL ESTIMATED~~ QUANTITIES

ITEM	UNIT	PIER NO. 1	PIER NO. 2	TOTAL
STRUCTURAL CONCRETE CLASS "C"	C.Y.	314.6	316.2	630.8
REINFORCING STEEL	LBS.	56,855	~~55,527~~ 56,574	~~112,382~~ 113,429
CREOSOTED PILING	L.F.	~~110 @ 25' = 2750~~	~~100 @ 25' = 2500~~	~~5250~~ 8314.3
CLASS 20 EXCAVATION	C.Y.	264	226	490

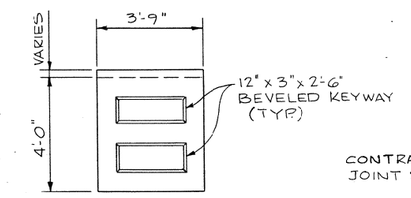

PIER CAP CONSTRUCTION JOINT DETAIL
(REBARS NOT SHOWN FOR CLARITY)

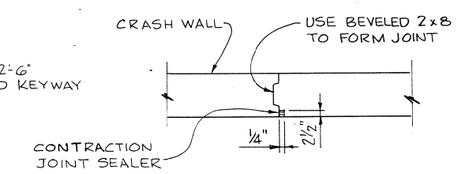

SECTION B-B
CRASH WALL CONSTRUCTION JOINT DETAIL
(REBARS NOT SHOWN FOR CLARITY)

PIER NOTES:

MINIMUM CLEAR DISTANCE FROM FACE OF CONCRETE TO NEAR REINFORCING BAR IS ~~TO BE~~ 2" UNLESS OTHERWISE NOTED OR SHOWN.

ALL EXPOSED CORNERS 90° OR SHARPER ~~ARE TO BE~~ WERE FILLETED WITH A 3/4" DRESSED AND BEVELED STRIP.

REINFORCING STEEL ~~IS TO BE~~ WAS SECURELY WIRED IN PLACE BEFORE CONCRETE ~~IS~~ WAS POURED.

PILES ARE ~~TO BE~~ DRIVEN TO FULL PENETRATION IF PRACTICABLE, BUT NOT LESS THAN 20 TONS NOR MORE THAN 40 TONS BEARING VALUE PER PILE.

ANCHOR BOLTS ~~ARE TO BE~~ WERE PRESET IN PIERS IN ACCORDANCE WITH THE STANDARD SPECIFICATIONS. THE WEIGHT OF ANCHOR BOLTS IS INCLUDED IN THE STRUCTURAL STEEL QUANTITIES.

Revised 03-06-81: Reinforcing Bar List - Pier No. 2 changed. Total Estimated Quantities changed.

BENT BAR DETAILS

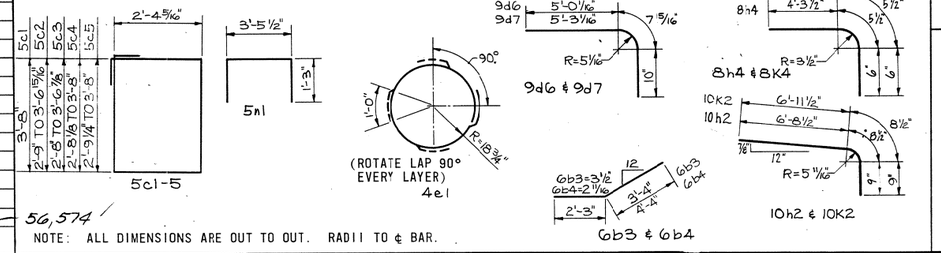

56,574

NOTE: ALL DIMENSIONS ARE OUT TO OUT. RADII TO ℄ BAR.

DESIGN FOR 57°03'00" SKEW
336'-0" X VARI. CONTINUOUS
WELDED PLATE GIRDER BRIDGE
102'-6" END SPANS 131'-0" INTERIOR SPAN
PIER DETAILS
STATION: 462+88.56 (℄ S.B. LANE, U.S. NO. 561) NOV. 1978
SCOTT COUNTY
IOWA DEPARTMENT OF TRANSPORTATION-HIGHWAY DIVISION
DESIGN SHEET NO. 7 OF 28 FILE NO. 25588 DESIGN NO. 980

SCOTT COUNTY

PROJECT NUMBER	STATE	FED. ROAD DIST. NO.	FISCAL YEAR	SHEET NO.	TOTAL SHEETS
	IOWA	5		39	125

TEMPORARY PAVING BLOCK DETAIL

DETAIL C
(SEE DES. SHT. #12)

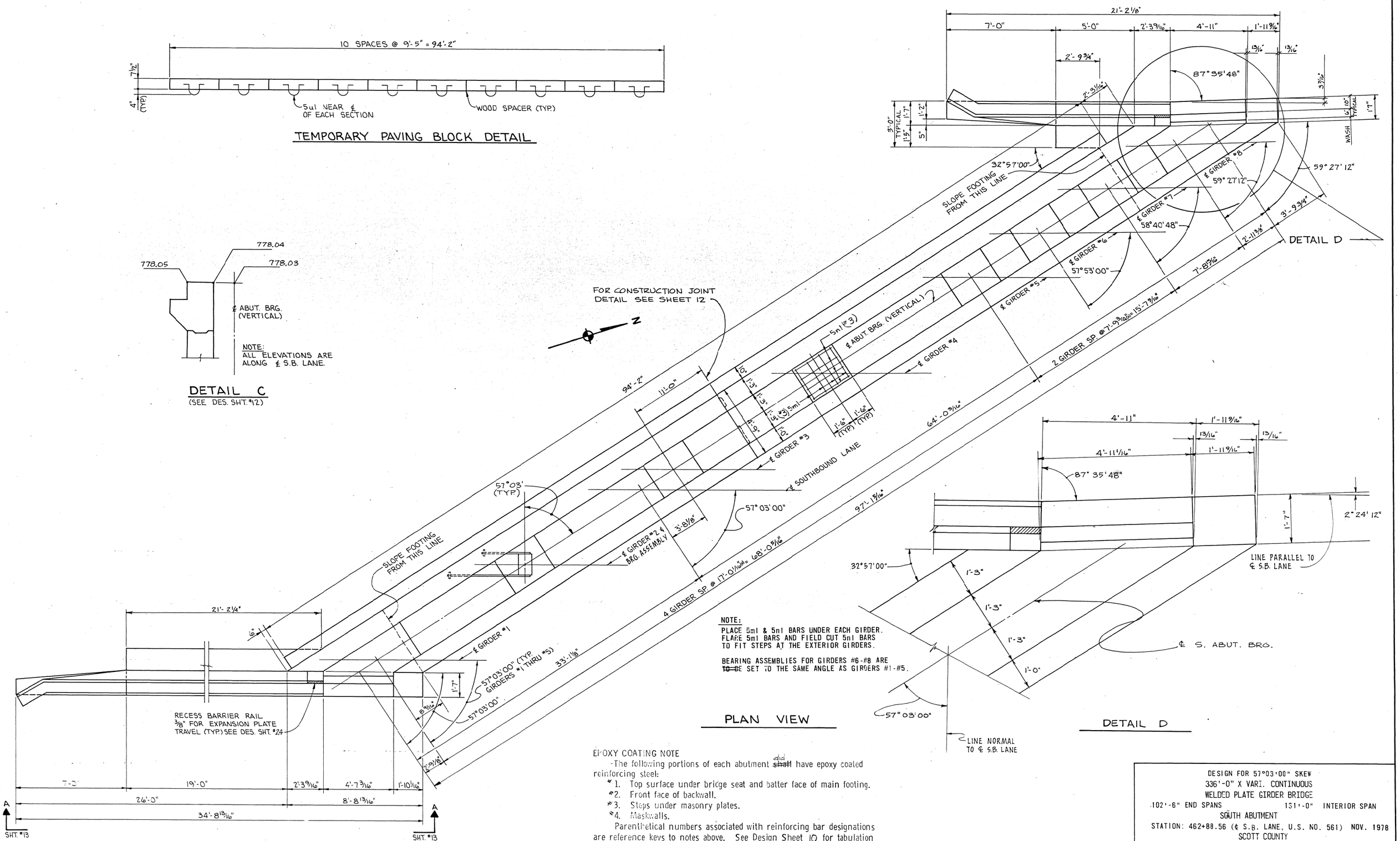

NOTE:
PLACE 5ml & 5nl BARS UNDER EACH GIRDER. FLARE 5ml BARS AND FIELD CUT 5nl BARS TO FIT STEPS AT THE EXTERIOR GIRDERS.

BEARING ASSEMBLIES FOR GIRDERS #6-#8 ARE ~~TO BE~~ SET TO THE SAME ANGLE AS GIRDERS #1-#5.

PLAN VIEW

DETAIL D

EPOXY COATING NOTE

-The following portions of each abutment ~~shall~~ did have epoxy coated reinforcing steel:

*1. Top surface under bridge seat and batter face of main footing.
*2. Front face of backwall.
*3. Steps under masonry plates.
*4. Maskwalls.

Parenthetical numbers associated with reinforcing bar designations are reference keys to notes above. See Design Sheet 10 for tabulation of bars to be epoxy coated.

DESIGN FOR 57°03'00" SKEW
336'-0" X VARI. CONTINUOUS
WELDED PLATE GIRDER BRIDGE
102'-6" END SPANS 131'-0" INTERIOR SPAN
SOUTH ABUTMENT
STATION: 462+88.56 (℄ S.B. LANE, U.S. NO. 561) NOV. 1978
SCOTT COUNTY
IOWA DEPARTMENT OF TRANSPORTATION-HIGHWAY DIVISION
DESIGN SHEET NO. 8 OF 29 FILE NO. 25588 DESIGN NO. 980

SCOTT COUNTY	PROJECT NUMBER	STATE	FED. ROAD DIST. NO.	FISCAL YEAR	SHEET NO.	TOTAL SHEETS
		IOWA	5		40	125

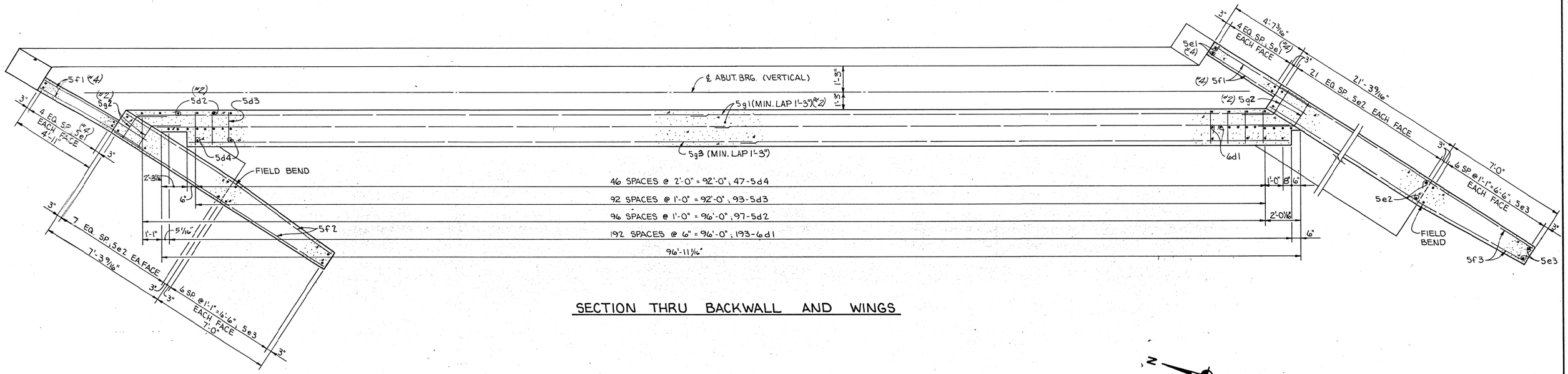

SECTION THRU BACKWALL AND WINGS

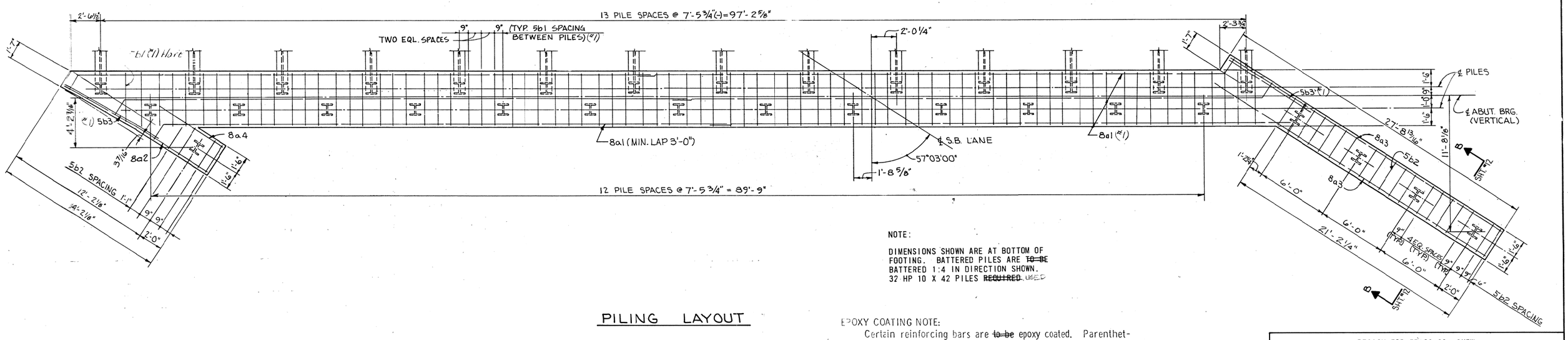

NOTE:

DIMENSIONS SHOWN ARE AT BOTTOM OF FOOTING. BATTERED PILES ARE ~~TO BE~~ BATTERED 1:4 IN DIRECTION SHOWN. 32 HP 10 X 42 PILES ~~REQUIRED~~ USED

PILING LAYOUT

EPOXY COATING NOTE:

Certain reinforcing bars are ~~to be~~ epoxy coated. Parenthetical numbers associated with re-bar designations are reference keys to notes on Design Sheet 8 .

DESIGN FOR 57°03'00" SKEW
336'-0" X VARI. CONTINUOUS
WELDED PLATE GIRDER BRIDGE
102'-6" END SPANS 131'-0" INTERIOR SPAN
SOUTH ABUTMENT
STATION: 462+88.56 (℄ S.B. LANE, U.S. NO. 561) NOV. 1978
SCOTT COUNTY
IOWA DEPARTMENT OF TRANSPORTATION-HIGHWAY DIVISION
DESIGN SHEET NO. 9 OF 29 FILE NO. 25588 DESIGN NO. 980

SCOTT COUNTY	PROJECT NUMBER	STATE	FED. ROAD DIST. NO.	FISCAL YEAR	SHEET NO.	TOTAL SHEETS
		IOWA	5		41	125

TEMPORARY PAVING BLOCK DETAIL

NOTE:
ALL ELEVATIONS ARE ALONG ℄ S.B. LANE.

DETAIL C
(SEE DESIGN SHT. # 12)

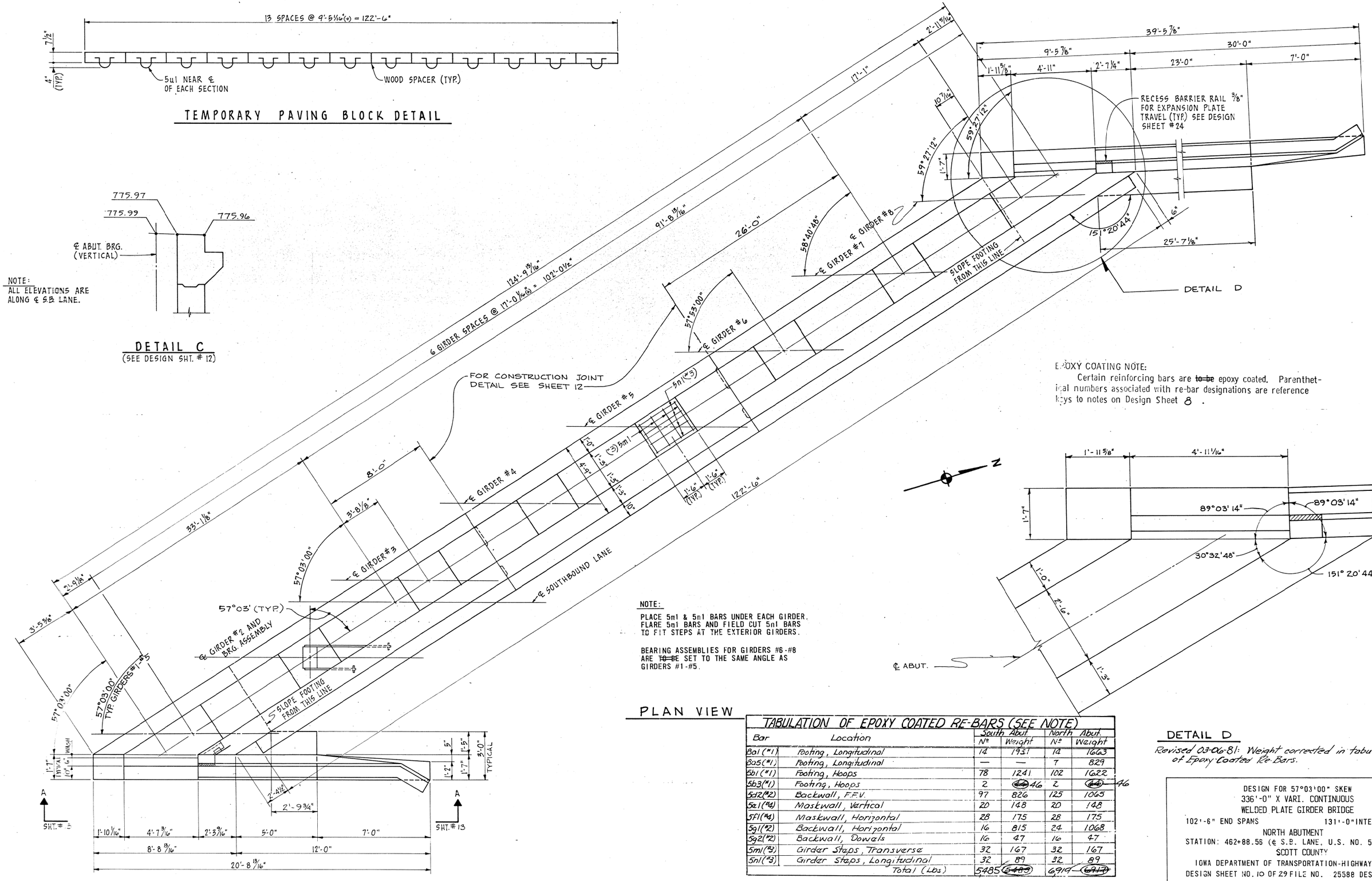

NOTE:

PLACE 5m1 & 5n1 BARS UNDER EACH GIRDER. FLARE 5m1 BARS AND FIELD CUT 5n1 BARS TO FIT STEPS AT THE EXTERIOR GIRDERS.

BEARING ASSEMBLIES FOR GIRDERS #6-#8 ARE ~~TO BE~~ SET TO THE SAME ANGLE AS GIRDERS #1-#5.

PLAN VIEW

EPOXY COATING NOTE:
Certain reinforcing bars are ~~to be~~ epoxy coated. Parenthetical numbers associated with re-bar designations are reference keys to notes on Design Sheet 8 .

DETAIL D

Revised 03-06-81: Weight corrected in tabulation of Epoxy Coated Re-Bars.

TABULATION OF EPOXY COATED RE-BARS (SEE NOTE)

Bar	Location	South Abut. Nº	South Abut. Weight	North Abut. Nº	North Abut. Weight
8a1 (*1)	Footing, Longitudinal	14	1931	14	1663
8a5 (*1)	Footing, Longitudinal	—	—	7	829
5b1 (*1)	Footing, Hoops	78	1241	102	1622
5b3 (*1)	Footing, Hoops	2	~~44~~ 46	2	~~44~~ 46
5d2 (*2)	Backwall, F.F.V.	97	826	125	1065
5e1 (*4)	Maskwall, Vertical	20	148	20	148
5f1 (*4)	Maskwall, Horizontal	28	175	28	175
5g1 (*2)	Backwall, Horizontal	16	815	24	1068
5g2 (*2)	Backwall, Dowels	16	47	16	47
5m1 (*3)	Girder Steps, Transverse	32	167	32	167
5n1 (*3)	Girder Steps, Longitudinal	32	89	32	89
	Total (Lbs)	5485	~~5485~~	6914	~~6914~~

DESIGN FOR 57°03'00" SKEW
336'-0" X VARI. CONTINUOUS
WELDED PLATE GIRDER BRIDGE
102'-6" END SPANS 131'-0" INTERIOR SPAN
NORTH ABUTMENT
STATION: 462+88.56 (℄ S.B. LANE, U.S. NO. 561) NOV. 1978
SCOTT COUNTY
IOWA DEPARTMENT OF TRANSPORTATION-HIGHWAY DIVISION
DESIGN SHEET NO. 10 OF 29 FILE NO. 25588 DESIGN NO. 980

SCOTT COUNTY

PROJECT NUMBER	STATE	FED. ROAD DIST. NO.	FISCAL YEAR	SHEET NO.	TOTAL SHEETS
	IOWA	5		42	125

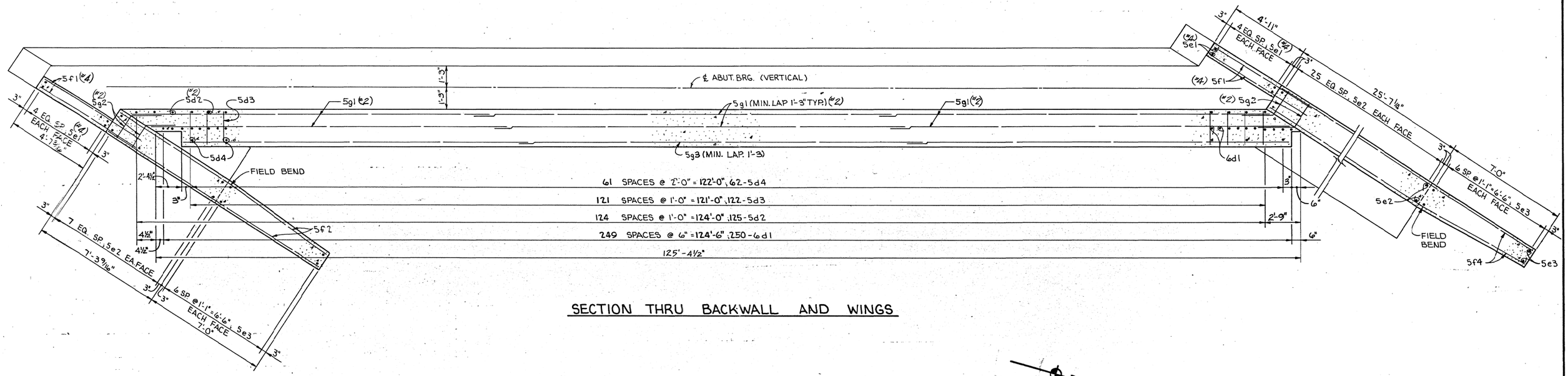

SECTION THRU BACKWALL AND WINGS

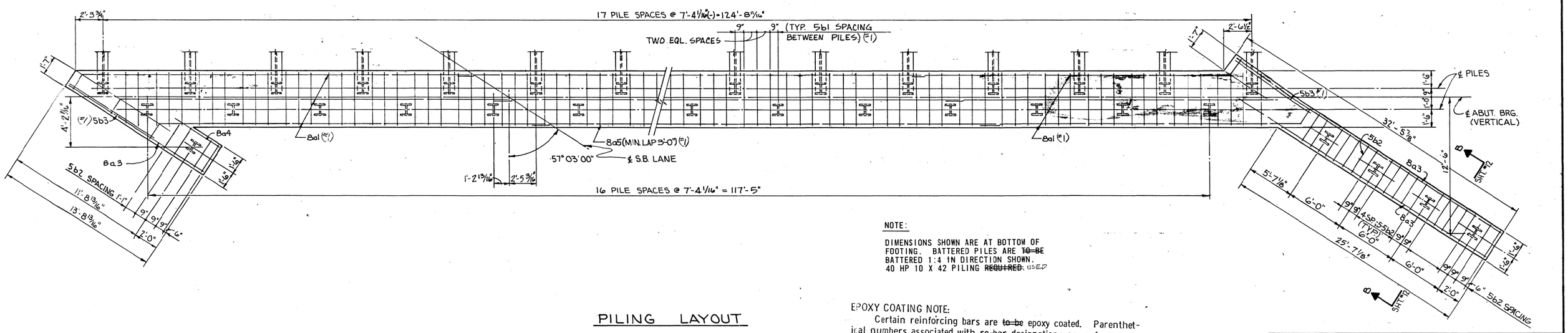

PILING LAYOUT

NOTE:

DIMENSIONS SHOWN ARE AT BOTTOM OF FOOTING. BATTERED PILES ARE ~~TO BE~~ BATTERED 1:4 IN DIRECTION SHOWN. 40 HP 10 X 42 PILING ~~REQUIRED~~ USED

EPOXY COATING NOTE:

Certain reinforcing bars are ~~to be~~ epoxy coated. Parenthetical numbers associated with re-bar designations are reference keys to notes on Design Sheet 8 .

DESIGN FOR 57°03'00" SKEW
336'-0" X VARI. CONTINUOUS
WELDED PLATE GIRDER BRIDGE
102'-6" END SPANS · 131'-0" INTERIOR SPAN
NORTH ABUTMENT
STATION: 462+88.56 (℄ S.B. LANE, U.S. NO. 561) NOV. 1978
SCOTT COUNTY
IOWA DEPARTMENT OF TRANSPORTATION-HIGHWAY DIVISION
DESIGN SHEET NO. 11 OF 29 FILE NO. 25588 DESIGN NO. 980

SCOTT COUNTY

PROJECT NUMBER	STATE	FED. ROAD DIST. NO.	FISCAL YEAR	SHEET NO.	TOTAL SHEETS
	IOWA	5		43	125

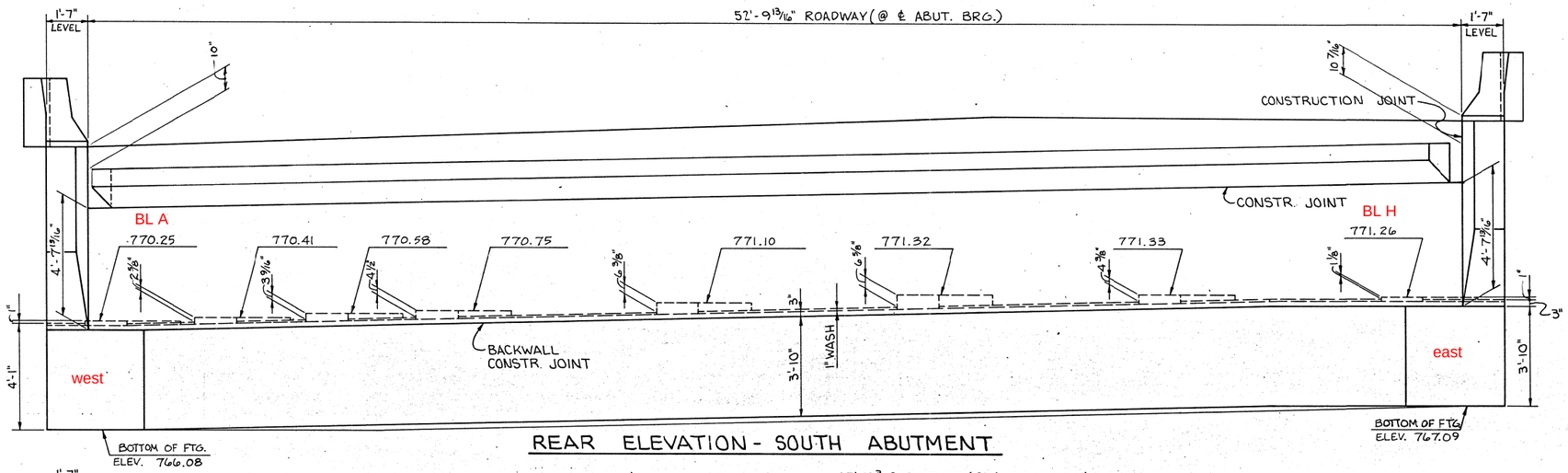

REAR ELEVATION - SOUTH ABUTMENT

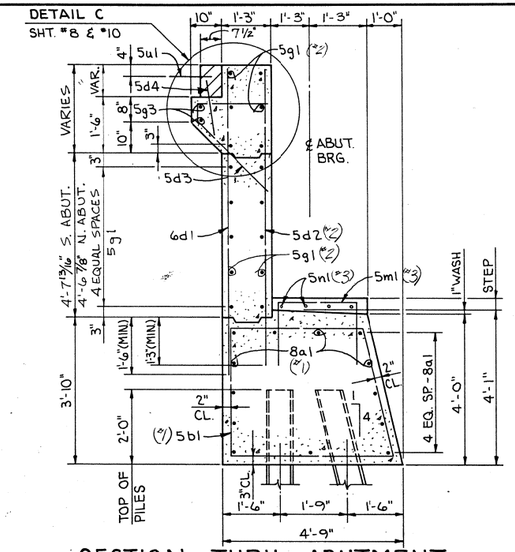

SECTION THRU ABUTMENT

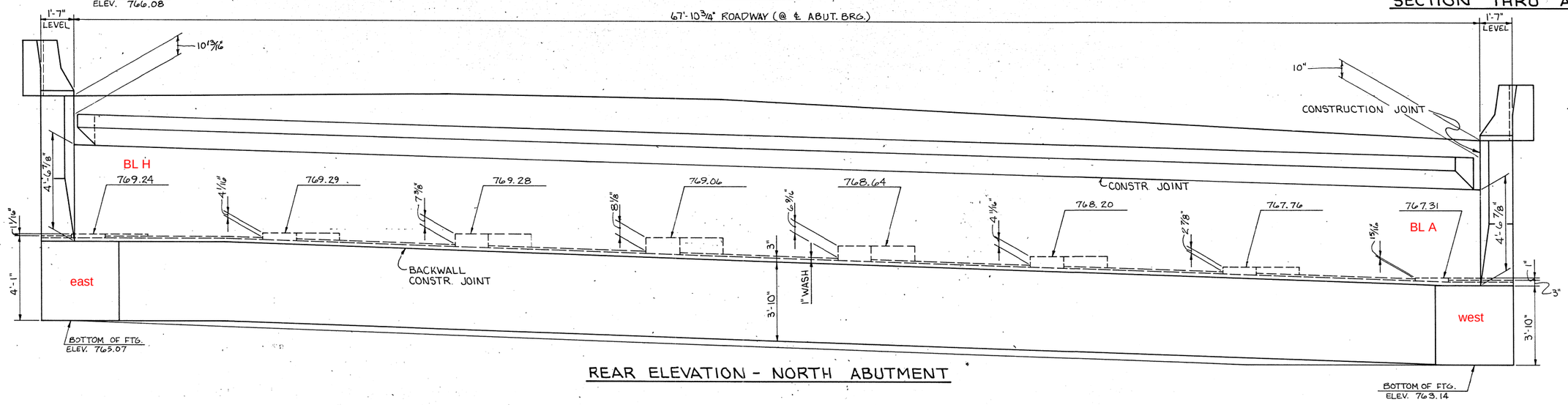

REAR ELEVATION - NORTH ABUTMENT

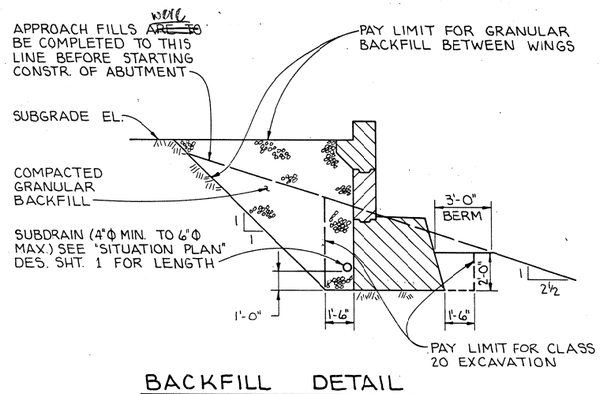

BACKFILL DETAIL

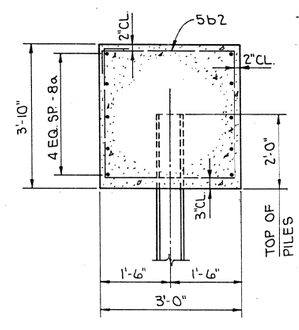

SECTION B-B
(SEE DES. SHT. #9 AND #11)

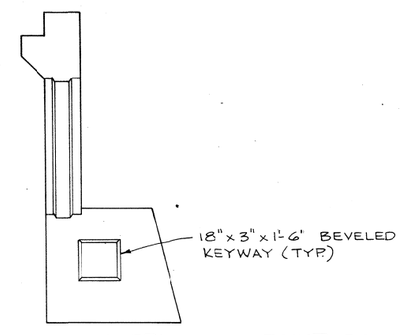

ABUTMENT CONSTRUCTION JOINT DETAIL
(REBARS NOT SHOWN FOR CLARITY)
(SEE SHEETS 8 & 10 FOR LOCATION)

EPOXY COATING NOTE:
Certain reinforcing bars are ~~to be~~ epoxy coated. Parenthetical numbers associated with re-bar designations are reference keys to notes on Design Sheet 8 .

DESIGN FOR 57°03'00"SKEW
336'-0" X VARI. CONTINUOUS
WELDED PLATE GIRDER BRIDGE
102'-6" END SPANS 131'-0" INTERIOR SPAN
ABUTMENT DETAILS
STATION: 462+88.56 (℄ S.B. LANE, U.S. NO. 561) NOV. 1978
SCOTT COUNTY
IOWA DEPARTMENT OF TRANSPORTATION-HIGHWAY DIVISION
DESIGN SHEET NO. 12 OF 29 FILE NO. 25588 DESIGN NO. 980

SCOTT COUNTY

PROJECT NUMBER	STATE	FED. ROAD DIST. NO.	FISCAL YEAR	SHEET NO.	TOTAL SHEETS
	IOWA	5		44	125

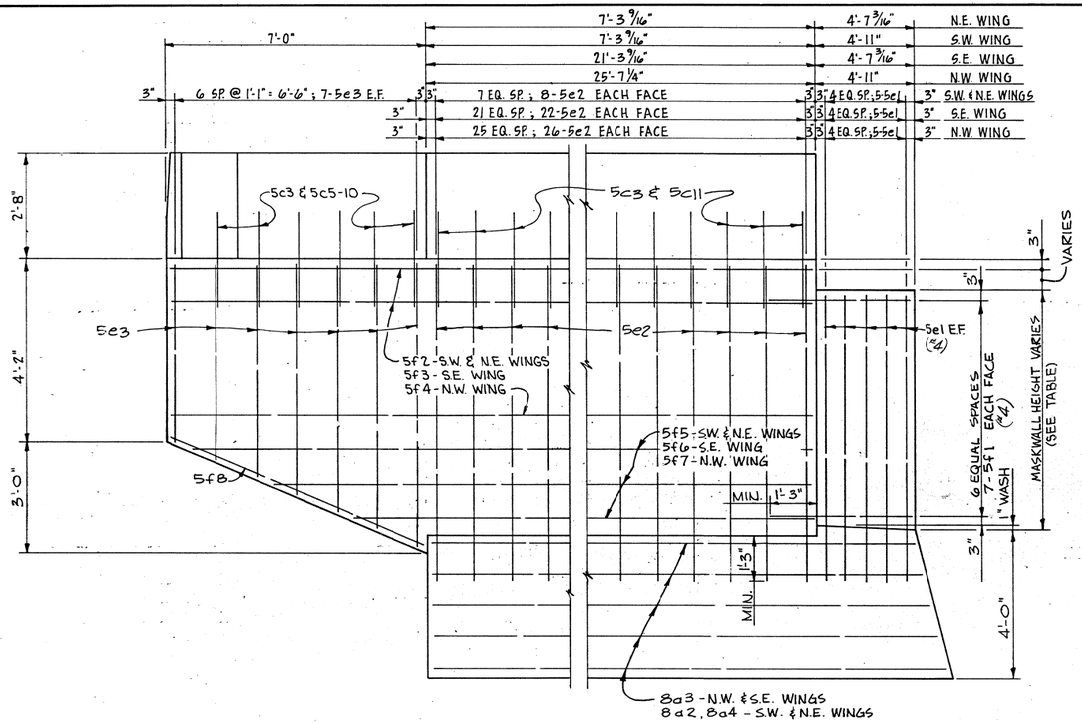

VIEW A-A
SHOWING REINFORCING

NOTE:

SEE SHEETS 8 AND 10 FOR LOCATION OF VIEW A-A, SEE SHEETS 27 AND 28 FOR 5C3 AND 5C5-11.

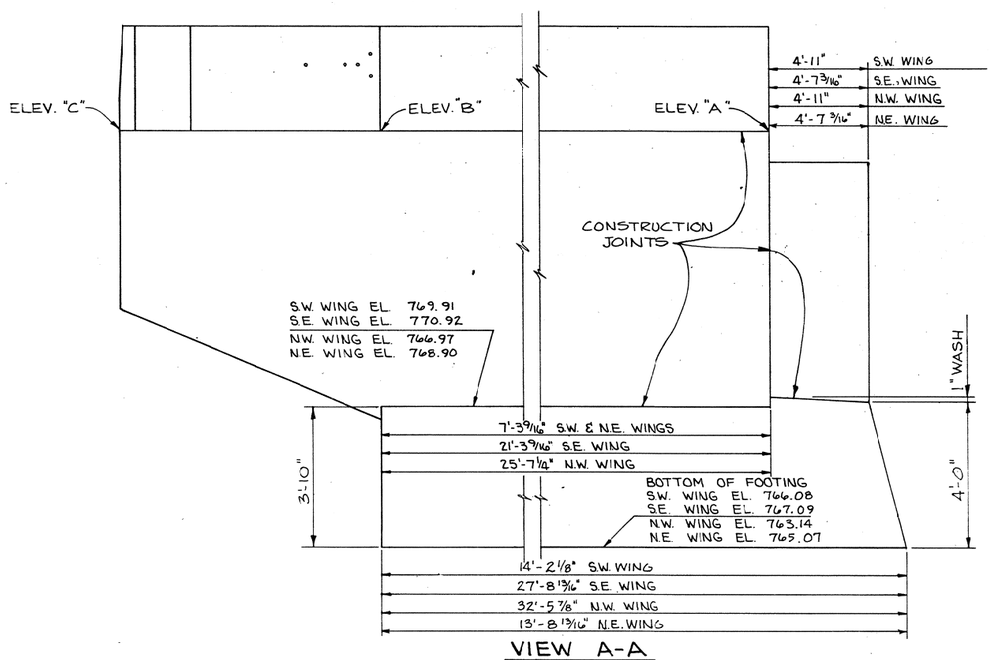

VIEW A-A
SHOWING ELEVATIONS

FINAL ~~TOTAL ESTIMATED~~ QUANTITIES			S. ABUT.	N. ABUT. (10,264)	TOTAL (18,548)
STRUCTURAL CONCRETE, CLASS "C"		CU. YDS.	130.7	162.8	293.5
REINFORCING STEEL		LBS.	8,284	~~10,251~~	~~18,535~~
HP 10X42 STEEL BEARING PILING	FURNISH	LIN. FT.	32 @ 81'	40 @ 65'	5192
	DRIVE	LIN. FT.	32 @ 81'	40 @ 65'	5192
PREBORED HOLES		LIN. FT.	32 @ 25'	40 @ 25'	1800
BRIDGE SEAT SEALER		SQ. FT.	434	556	990
SUBDRAIN		LIN. FT.	134	172	306
CLASS 20 EXCAVATION		CU. YDS.	154	192	346
GRANULAR BACKFILL		CU. YDS.	228	292	520
REINFORCING STEEL, EPOXY COATED		LBS.	~~5483~~ 5485	~~6917~~ 6919	~~12,400~~ 12,404

CONCRETE PLACEMENT QUANTITIES		
LOCATION	S. ABUT.	N. ABUT. **
FOOTING & STEPS	75.3	94.7
BACKWALL BELOW CONSTRUCTION JOINT	20.9	26.5
BACKWALL ABOVE CONSTRUCTION JOINT	14.7	19.5
EAST WING & WINGWALL	10.8	5.0
WEST WING & WINGWALL	5.0	12.2
* PAVING BLOCK	2.3	3.3
MASKWALL	1.7	1.6
TOTAL (CU. YDS.)	130.7	162.8

* ~~MAY BE~~ CLASS "C" ~~OR CLASS "D"~~

WING ELEVATIONS AND MASKWALL HEIGHT				
	SOUTH ABUTMENT		NORTH ABUTMENT	
	W. WING	E. WING	W. WING	E. WING
ELEV. A	776.88	777.94	773.91	775.90
ELEV. B	776.92	778.03	773.68	775.85
ELEV. C	776.97	778.06	773.61	775.81
MASKWALL HEIGHT	5'-11 5/8"	5'-11 5/8"	5'-11 13/16"	5'-11 11/16"

ABUTMENT NOTES:

ALL EXPOSED CORNERS OF 90° OR SHARPER ~~ARE TO BE~~ were FILLETED WITH A 3/4" DRESSED AND BEVELED STRIP.

REINFORCING STEEL ~~IS TO BE~~ to be SECURELY WIRED IN PLACE BEFORE CONCRETE ~~IS~~ was POURED.

MINIMUM CLEAR DISTANCE FROM FACE OF CONCRETE TO NEAR REINFORCING BARS IS ~~TO BE~~ 2" UNLESS OTHERWISE NOTED OR SHOWN.

ALL BACKFILL BEHIND ABUTMENTS BETWEEN WINGS IS ~~TO BE~~ GRANULAR BACKFILL. THE REMAINDER OF ABUTMENT EXCAVATION IS ~~TO BE~~ BACKFILLED WITH SOIL.

THE MASKWALL ~~IS TO BE~~ was POURED BEFORE SUPERSTRUCTURE SLAB ~~IS~~ was POURED.

CONSTRUCTION JOINT KEYWAYS ~~ARE TO BE~~ were FORMED WITH BEVELED 2 X 6'S.

BEAMS AND MASONRY PLATES ~~ARE TO BE~~ were SET BEFORE BACKWALL IS POURED.

THE PORTION OF BACKWALL CONTAINING ABUTMENT ANCHORAGE OF THE EXPANSION DEVICE ~~IS TO BE~~ was POURED AFTER BRIDGE FLOOR ~~IS~~ was PLACED.

BEFORE PAVING BLOCK ~~IS~~ was POURED, ~~BEND DOWN~~ Bent down DOWELS 5d4 (STRUCTURAL GRADE) AND LINED PAVING NOTCH WITH TARPAPER TO PREVENT BOND. PAVING BLOCK IS TO BE REMOVED AND BARS STRAIGHTENED BEFORE PAVEMENT IS PLACED (By others)

THE NUMBER OF PILES ~~IS~~ was BASED ON 37 TONS BEARING PER PILE. PILES ARE ~~TO BE~~ were DRIVEN TO FULL PENETRATION IF PRACTICABLE, BUT NOT LESS THAN 37 TONS BEARING VALUE PER PILE.

CONTRACTOR ~~HAS~~ HAS THE OPTION TO SPLICE BARS OVER 40'-0" LONG AT SPLICE LOCATIONS ~~TO BE~~ APPROVED BY THE ENGINEER. PAYMENT FOR REINFORCING BARS ~~SHALL BE~~ WAS BASED ON NO SPLICES, AND NO ALLOWANCE ~~SHALL BE~~ WAS MADE FOR THE ADDITIONAL LENGTH OF BAR REQUIRED FOR THE USE OF SPLICES.

EPOXY COATING NOTE:

Certain reinforcing bars are ~~to be~~ epoxy coated. Parenthetical numbers associated with re-bar designations are reference keys to notes on Design Sheet 8.

Revised 03-06-81: Reinforcing Steel list and Total ~~Estimated~~ Quantities list corrected.

REINFORCING STEEL

BAR	LOCATION	SHAPE	SOUTH ABUTMENT NO.	SOUTH ABUTMENT LENGTH	SOUTH ABUTMENT WEIGHT	NORTH ABUTMENT NO.	NORTH ABUTMENT LENGTH	NORTH ABUTMENT WEIGHT
8a1 (1)	FOOTING - LONGITUDINAL		26	51'-8"	3587	26	44'-6"	3089
8a2	WING FOOTING - LONGITUDINAL		5	VARIES	171	5	VARIES	167
8a3	WING FOOTING - LONGITUDINAL		10	VARIES	705	10	VARIES	834
8a4	WING FOOTING - LONGITUDINAL		5	4'-10"	65	5	4'-10"	65
8a5 (1)	FOOTING - LONGITUDINAL		-	-	-	13	44'-4"	1539
5b1 (1)	FOOTING, HOOPS		78	15'-3"	1241	102	15'-3"	1622
5b2	WING FOOTING HOOPS		22	12'-5"	285	~~37~~ 29	12'-5"	~~485~~ 298
5b3 (1)	FOOTING, HOOPS		2	~~[illegible]~~ 22'-2	~~44~~ 46	2	~~[illegible]~~ 22'-2	~~44~~ 46
6d1	BACKWALL, BFV		193	8'-5"	2440	250	8'-5"	3160
5d2 (2)	BACKWALL, FFV		97	8'-2"	826	125	8'-2"	1065
5d3	PAVING NOTCH - TRANSVERSE		93	4'-6"	436	122	4'-6"	573
5d4	PAVING DOWELS		47	2'-0"	98	62	2'-0"	129
5e1 (4)	MASKWALL - VERTICAL		20	7'-1"	148	20	7'-1"	148
5e2	WINGWALL - VERTICAL		60	8'-3"	516	68	8'-3"	585
5e3	WING - VERTICAL		28	VARIES	141	28	VARIES	141
5f1 (4)	MASKWALL - HORIZONTAL		28	6'-0"	175	28	6'-0"	175
5f2	WING & WINGWALL - HORIZONTAL		10	13'-11"	145	10	13'-11"	145
5f3	WING & WINGWALL - HORIZONTAL		10	27'-11"	291	-	-	-
5f4	WING & WINGWALL - HORIZONTAL		-	-		10	32'-3"	336
5f5	WING & WINGWALL - HORIZONTAL		6	VARIES	66	6	VARIES	72
5f6	WING & WINGWALL - HORIZONTAL		6	VARIES	153	-	-	-
5f7	WING & WINGWALL - HORIZONTAL		-	-	-	6	VARIES	185
5f8	WING SLOPE		4	7'-4"	31	4	7'-4"	31
5g1 (2)	BACKWALL - HORIZONTAL		32	48'-10"	1630	48	42'-8"	2136
5g2 (2)	BACKWALL - DOWELS		32	2'-10"	95	32	2'-10"	95
5g3	PAVING NOTCH - LONGITUDINAL		4	47'-7"	199	6	41'-7"	260
5m1 (3)	GIRDER STEPS - TRANSVERSE		32	5'-0"	167	32	5'-0"	167
5n1 (3)	GIRDER STEPS - LONGITUDINAL		32	2'-8"	89	32	2'-8"	89
5u1	PAVING BLOCK - LOOPS		10	2'-3"	23	13	2'-3"	31
	*** TOTAL (LBS.)				~~13,767~~			~~17,168~~

BENT BAR DETAILS
13,769 17,183

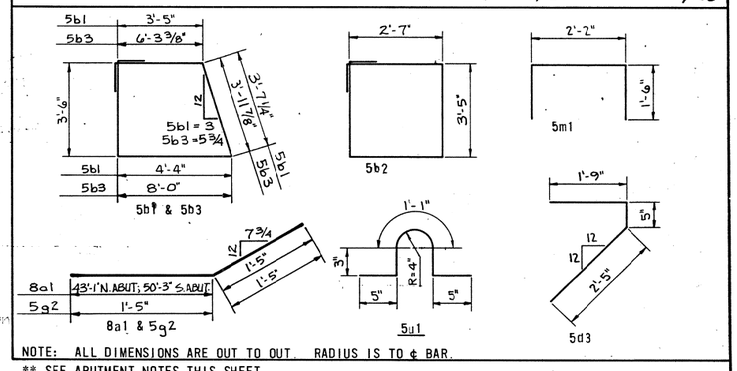

NOTE: ALL DIMENSIONS ARE OUT TO OUT. RADIUS IS TO ℄ BAR.

** SEE ABUTMENT NOTES THIS SHEET.

*** Includes both regular re-bars and epoxy coated re-bars. See tabulation of epoxy coated re-bars on Design Sheet 10.

DESIGN FOR 57°03'00" SKEW
336'-0" X VARI. CONTINUOUS
WELDED PLATE GIRDER BRIDGE
102'-6" END SPANS 131'-0" INTERIOR SPAN
ABUTMENT DETAILS
STATION: 462+88.56 (℄ S.B. LANE, U.S. NO. 561) NOV. 1978

SCOTT COUNTY
IOWA DEPARTMENT OF TRANSPORTATION-HIGHWAY DIVISION
DESIGN SHEET NO. 13 OF 29 FILE NO. 25588 DESIGN NO. 980

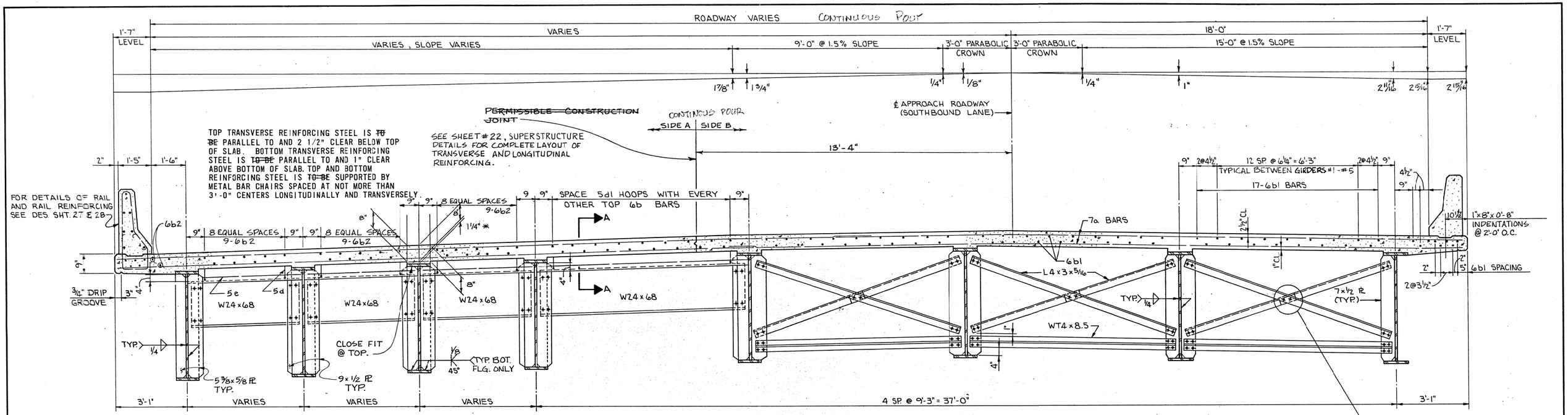

PART SECTION NEAR SOUTH ABUTMENT

PART INTERMEDIATE SECTION

SEE DESIGN SHEET 15 FOR INTERMEDIATE DIAPHRAGM STIFFENER DETAILS

SUPERSTRUCTURE NOTES:

THIS BRIDGE IS DESIGNED FOR HS20-44 LOADING, PLUS 20 LB. PER SQUARE FOOT OF ROADWAY FOR FUTURE WEARING SURFACE.

MINIMUM CLEAR DISTANCE FROM EDGE OF BAR TO FACE OF CONCRETE IS ~~TO BE~~ 2" UNLESS OTHERWISE NOTED OR SHOWN.

THE FLOOR SLAB AS SHOWN INCLUDES 1/2" OF WEARING SURFACE.

ALL FIELD CONNECTIONS ~~ARE TO BE~~ BOLTED USING "HIGH TENSILE STRENGTH BOLTS". UNLESS OTHERWISE NOTED, ALL OPEN HOLES ARE ~~TO BE~~ 15/16"Φ AND ALL BOLTS ARE TO BE 7/8"Φ.

BOTTOM FLANGES ARE ~~TO BE~~ PERPENDICULAR TO WEBS AT THE REACTION JOINTS.

ALL PAINT ~~IS TO BE~~ OMITTED ON TOPS OF TOP FLANGES AND ON OTHER STEEL SURFACES IN CONTACT WITH CONCRETE. PARTS INACCESSIBLE AFTER ERECTION WERE ~~ARE TO BE~~ GIVEN THE FULL PAINT SYSTEM IN THE SHOP.

FORMS FOR THE SLAB AND BARRIER RAIL ~~ARE TO BE~~ WERE SUPPORTED BY THE GIRDERS.

FILL THICKNESS SHOWN ON PLANS ARE BASED ON NOMINAL BEAM OR GIRDER DIMENSIONS. THESE THICKNESSES ~~ARE TO BE~~ VERIFIED OR ADJUSTED DURING FABRICATION TO SECURE A CLOSE FIT. EACH FILL PLATE ~~SHALL~~ FIT TO THE NEAREST 1/16" IN THICKNESS AND SINGLE PLATES ~~ARE~~ REQUIRED AT ANY FILL LOCATION. BEAMS OR GIRDERS ARE ~~TO BE~~ TRULY SQUARE AT SPLICE POINTS WITH FLANGES PERPENDICULAR TO WEBS.

THE DESIGN DRAWINGS INDICATE AWS PREQUALIFIED WELDED JOINTS, AND UNLESS OTHERWISE NOTED THE DESIGN JOINT DETAILS ARE FOR MANUAL SHIELDED METAL ARC WELDING. ALTERNATE JOINT DETAILS MAY BE SUBMITTED FOR APPROVAL.

MAGNETIC PARTICLE INSPECTION OF WELDS, IN ACCORDANCE WITH THE STANDARD SPECIFICATIONS, ~~WILL BE~~ WERE REQUIRED FOR THE WEB TO FLANGE WELDS AND THE BEARING STIFFENER WELDS OF THE GIRDERS.

STUD SHEAR CONNECTORS ~~ARE TO BE~~ WERE WELDED IN THE SHOP OR IN THE FIELD AT THE LOCATIONS SHOWN ON THE DESIGN PLANS OR THE APPROVED SHOP DRAWINGS.

FAYING SURFACES AT DIAPHRAGM CONNECTIONS ~~ARE TO BE~~ WERE GIVEN THE SHOP COAT OF PAINT.

THE SLAB TRANSVERSE AND LONGITUDINAL REINFORCING, 7a AND 6b BARS, ARE ~~TO BE~~ GRADE 60 REINFORCING. ALL OTHER REINFORCING MAY BE GRADE 40.

THE TOP LAYER OF SLAB TRANSVERSE AND LONGITUDINAL REINFORCING, 7a AND 6b BARS ARE ~~TO BE~~ EPOXY COATED. THE EPOXY COATING ~~SHALL BE~~ WERE IN ACCORDANCE WITH STANDARD SPECIFICATIONS OF THE IOWA D.O.T., SERIES OF 1977.

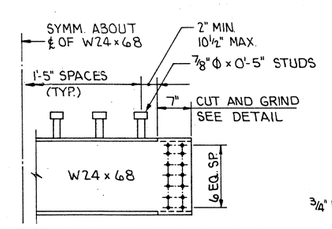

ABUTMENT DIAPHRAGM CONNECTION

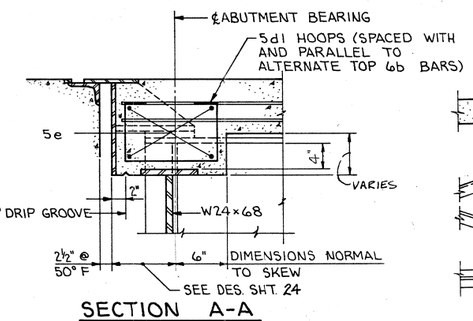

SECTION A-A

TRANSVERSE REINFORCING NOT SHOWN

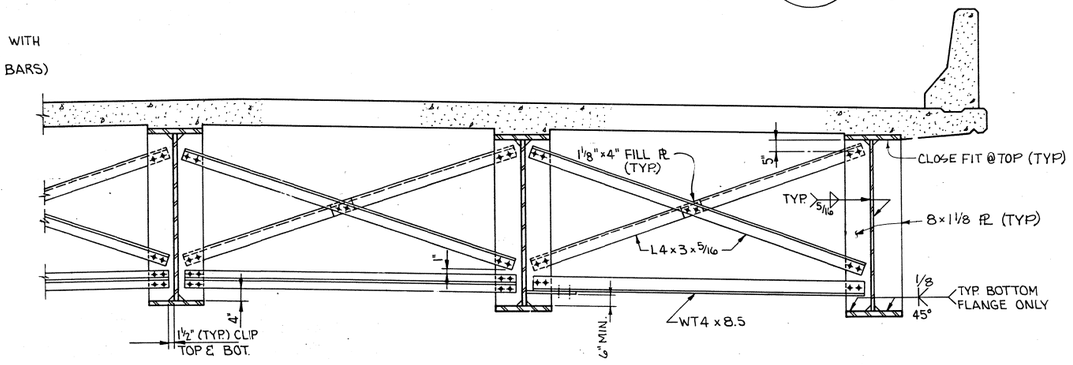

PART SECTION NEAR PIER

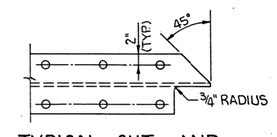

TYPICAL CUT AND GRIND DETAIL

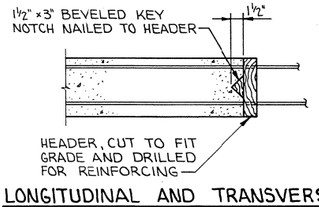

LONGITUDINAL AND TRANSVERSE CONSTRUCTION JOINT DETAIL

NOT USED

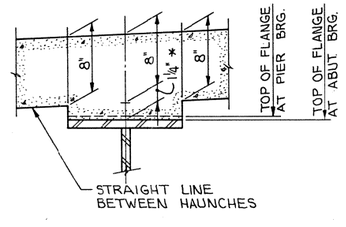

TYPICAL SLAB AND HAUNCH DETAIL

* THE HAUNCH DIMENSION SHOWN IS THE NOMINAL HAUNCH DIMENSION NEAR THE ABUTMENT BEARINGS. FOR THE SLAB THICKNESS OVER THE BEAM AT ANY LOCATION THE NOMINAL HAUNCH DIMENSION IS TO BE DECREASED BY THE ADDITIONAL FLANGE THICKNESS AT THAT POINT AND INCREASED BY THE AMOUNT INDICATED ON THE "HAUNCH THICKENING DIAGRAM" SHOWN ON SHEET 18, AND MAY BE INCREASED OR DECREASED TO COMPENSATE FOR CONSTRUCTION INACCURACIES. THE MAXIMUM HAUNCH ALLOWED IS 2 INCHES AND THE MINIMUM HAUNCH ALLOWED IS 0 INCHES.

DESIGN FOR 57°03'00" SKEW
336'-0" X VARI. CONTINUOUS
WELDED PLATE GIRDER BRIDGE
102'-6" END SPANS 131'-0" INTERIOR SPAN
SUPERSTRUCTURE DETAILS
STATION: 462+88.56 (℄ S.B. LANE, U.S. NO. 561) NOV. 1978
SCOTT COUNTY
IOWA DEPARTMENT OF TRANSPORTATION-HIGHWAY DIVISION
DESIGN SHEET NO. 14 OF 29 FILE NO. 25588 DESIGN NO. 980

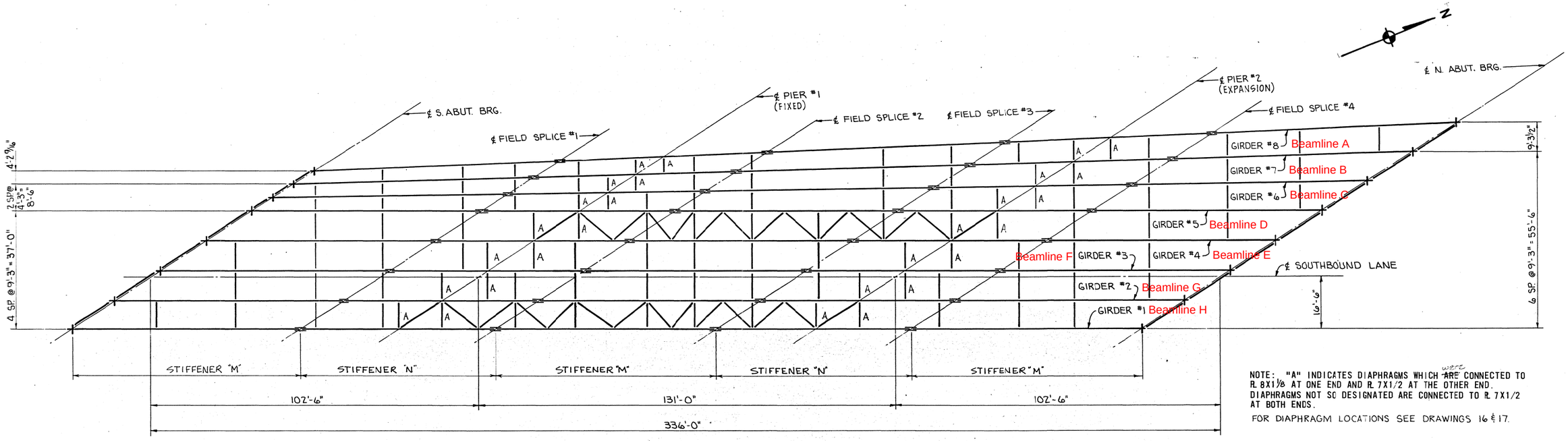

NOTE: "A" INDICATES DIAPHRAGMS WHICH ~~ARE~~ were CONNECTED TO PL 8X1 1/8 AT ONE END AND PL 7X1/2 AT THE OTHER END. DIAPHRAGMS NOT SO DESIGNATED ARE CONNECTED TO PL 7X1/2 AT BOTH ENDS.

FOR DIAPHRAGM LOCATIONS SEE DRAWINGS 16 & 17.

STRUCTURAL STEEL LAYOUT

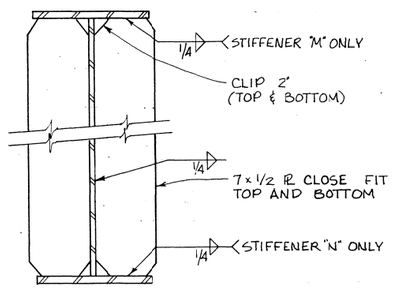

INTERMEDIATE DIAPHRAGM STIFFENER DETAILS

SEE DESIGN SHEET 20 FOR INTERMEDIATE GUSSET STIFFENERS. SEE DESIGN SHEET 14 FOR INTERMEDIATE DIAPHRAGMS.

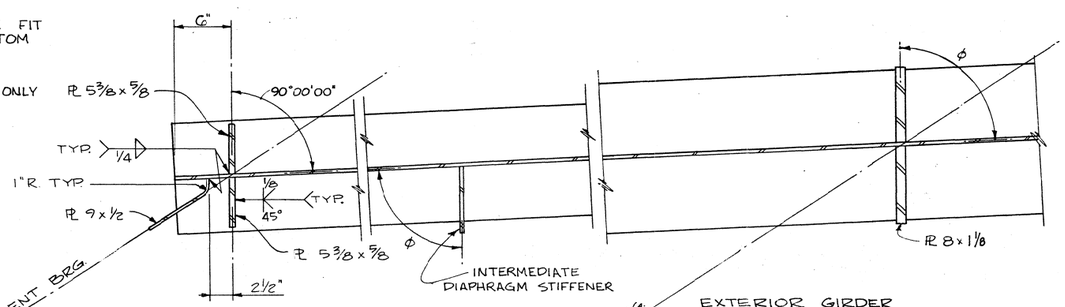

EXTERIOR GIRDER

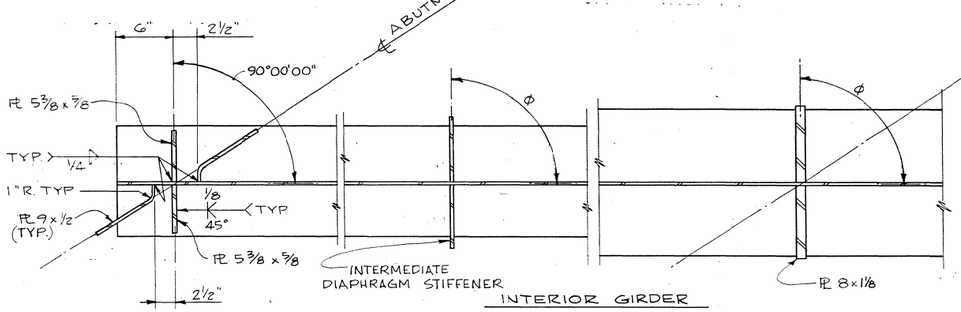

INTERIOR GIRDER

GIRDER DETAILS

STIFFENER ORIENTATION L's	
GIRDER NO.	Ø ANGLE
1-5	90°00'00"
6	89°10'00"
7	88°22'12"
8	87°35'48"

MOMENT AND REACTION TABLE

MOM. IN FOOT-KIPS REACTION IN KIPS LOAD IN KIPS/FOOT	LOAD		POS. MOM. END SPANS		NEG. MOM. @ PIERS		POS. MOM. INT. SPAN		ABUT. REACTION		PIER REACTION	
	EXT.	INT.	EXT.	INT.	EXT.	INT.	EXT.	INT.	EXT.	INT.	EXT.	INT.
DEAD LOAD NO. 1	1.017	1.168	713.2	741.2	1672.7	1799.4	570.6	668.9	35.5	41.1	135.3	155.2
DEAD LOAD NO. 2 *	.523	0.186	438.6	139.7	807.7	251.0	453.8	163.0	20.3	7.2	68.0	24.0
L.L. (TRUCK) + IMPACT	-	-	1200.1	1357.7	-	-	1236.4	1430.4	66.3	70.6	-	-
L.L. (LANE) + IMPACT	-	-	-	-	1097.6	1252.4	-	-	-	-	107.4	118.8
TOTAL	-	-	-	-	3578.0	3302.8	-	-	122.1	118.9	310.7	298.0

* INCLUDES FUTURE WEARING SURFACE AND BARRIER CURB (BARRIER CURB ASSUMED CARRIED BY EXTERIOR GIRDERS ONLY.)

NOTE: EXTERIOR GIRDER MOMENTS & REACTIONS ARE SHOWN FOR GIRDER #1 OR GIRDER #8, WHICHEVER GOVERNS.

DESIGN FOR 57°03'00" SKEW
336'-0" X VARI. CONTINUOUS
WELDED PLATE GIRDER BRIDGE
102'-6" END SPANS 131'-0" INTERIOR SPAN
SUPERSTRUCTURE DETAILS
STATION: 462+88.56 (℄ S.B. LANE, U.S. NO. 561) NOV. 1978
SCOTT COUNTY
IOWA DEPARTMENT OF TRANSPORTATION-HIGHWAY DIVISION
DESIGN SHEET NO. 15 OF 29 FILE NO. 25588 DESIGN NO. 980

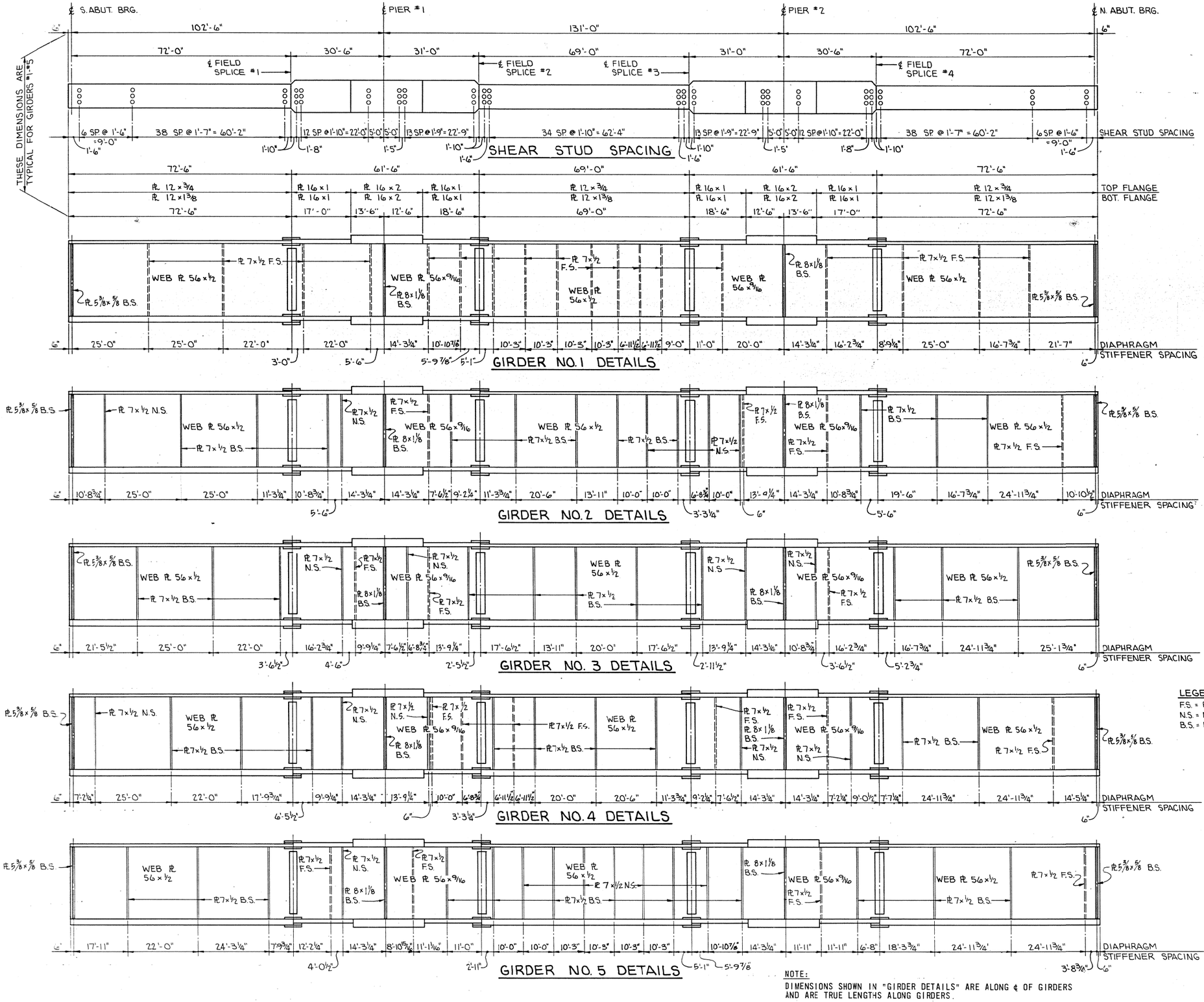

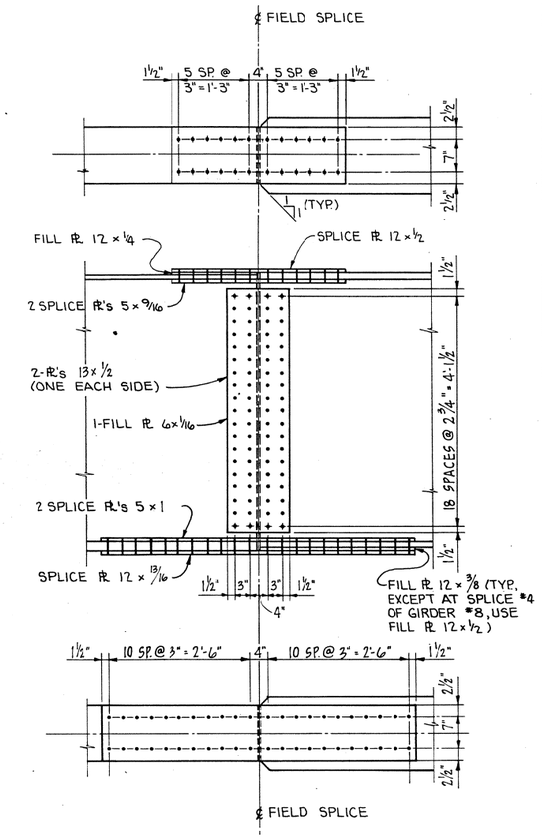

GIRDER SPLICE DETAILS

LEGEND:
F.S. = FAR SIDE
N.S. = NEAR SIDE
B.S. = BOTH SIDES

NOTE:
DIMENSIONS SHOWN IN "GIRDER DETAILS" ARE ALONG ℄ OF GIRDERS AND ARE TRUE LENGTHS ALONG GIRDERS.

DESIGN FOR 57°03'00" SKEW
336'-0" X VARI. CONTINUOUS
WELDED PLATE GIRDER BRIDGE
102'-6" END SPANS 131'-0" INTERIOR SPAN
SUPERSTRUCTURE DETAILS
STATION: 462+88.56 (℄ S.B. LANE, U.S. NO. 561) NOV. 1978
SCOTT COUNTY
IOWA DEPARTMENT OF TRANSPORTATION-HIGHWAY DIVISION
DESIGN SHEET NO. 16 OF 29 FILE NO. 25588 DESIGN NO. 980

SCOTT COUNTY

PROJECT NUMBER	STATE	FED. ROAD DIST. NO.	FISCAL YEAR	SHEET NO.	TOTAL SHEETS
	IOWA	5		48	125

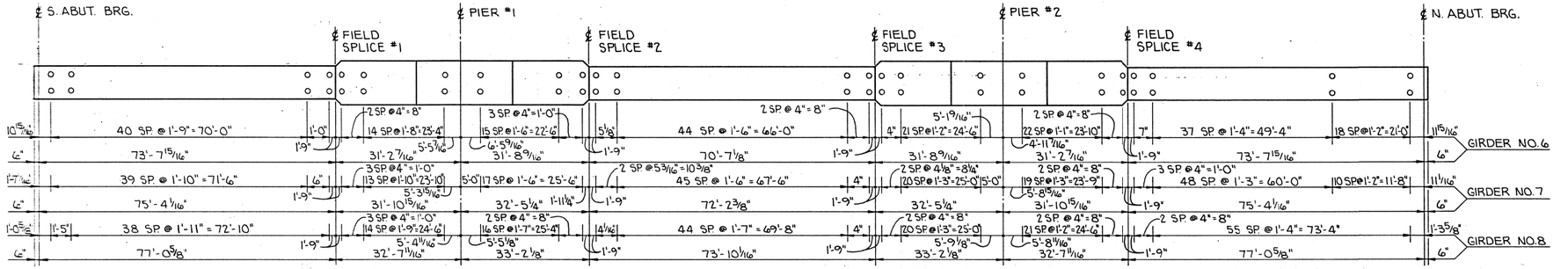

SHEAR STUD SPACING

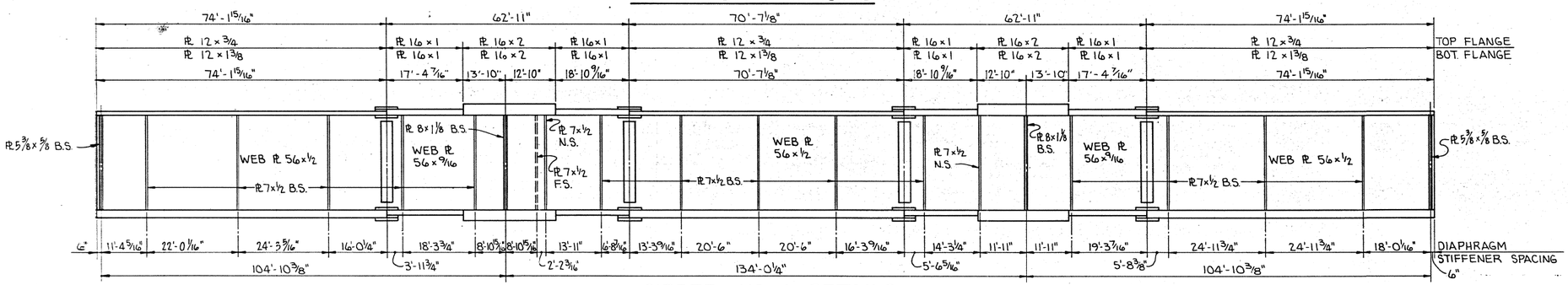

GIRDER NO. 6 DETAILS

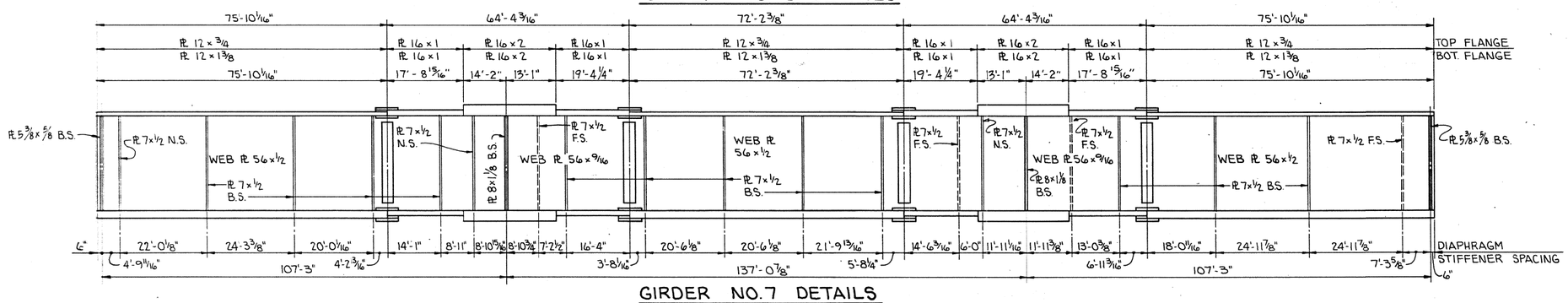

GIRDER NO. 7 DETAILS

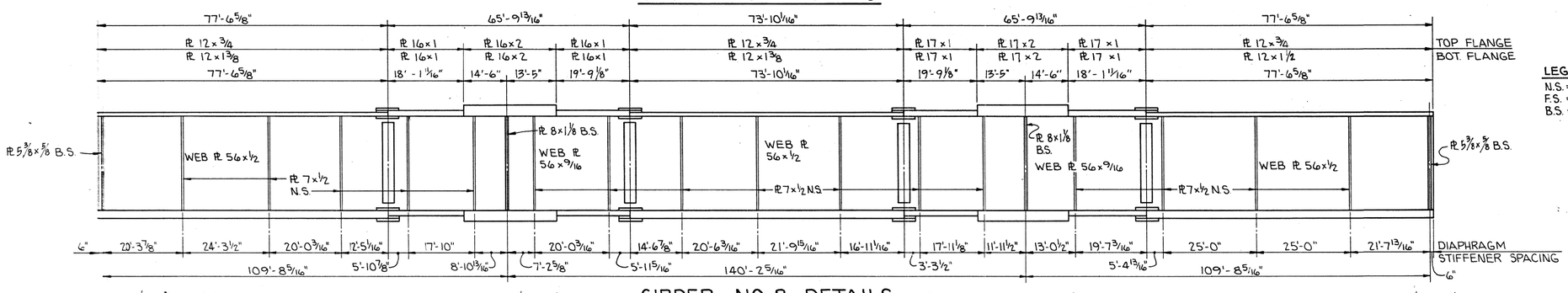

GIRDER NO. 8 DETAILS

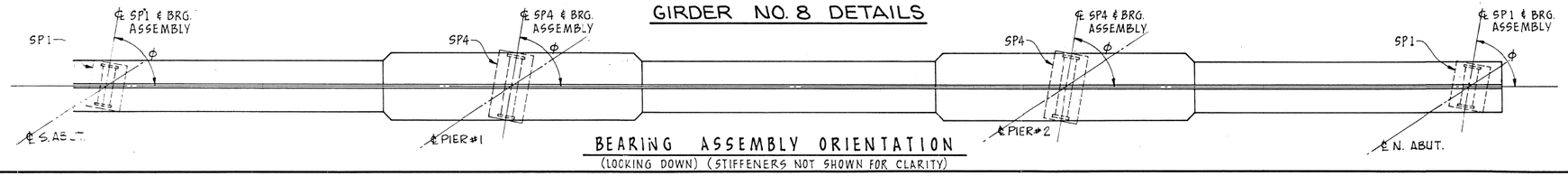

BEARING ASSEMBLY ORIENTATION

(LOCKING DOWN) (STIFFENERS NOT SHOWN FOR CLARITY)

NOTE:

DIMENSIONS SHOWN IN "GIRDER DETAILS" ARE ALONG ℄ OF GIRDERS AND ARE TRUE LENGTHS ALONG GIRDERS.

FLANGE TO WEB WELD SIZE	
WELD SIZE	FLANGE THICKNESS
1/4	3/4"
5/16	1", 1 3/8" & 1 1/2"
3/8	2"

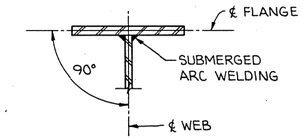

FLANGE TO WEB DETAILS

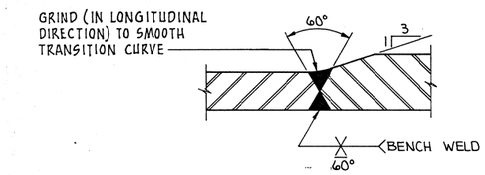

FLANGE WELDED SPLICE PLATE

NOTE: ALL FLANGE BUTT-WELDED JOINTS ~~ARE~~ WERE ~~TO BE~~ RADIOGRAPHED FULL WIDTH.

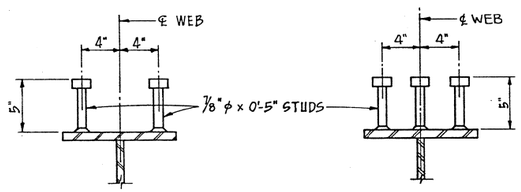

2 STUDS PER ROW

3 STUDS PER ROW

SHEAR STUD DETAILS

LEGEND:

N.S. = NEAR SIDE
F.S. = FAR SIDE
B.S. = BOTH SIDES

LOCATION	ϕ
GIRDERS #1-#5	90°00'00"
GIRDER #6	89°10'00"
GIRDER #7	88°22'12"
GIRDER #8	87°35'48"

BEARING ASSEMBLY ORIENTATION ANGLES

DESIGN FOR 57°03'00" SKEW
336'-0" X VARI. CONTINUOUS
WELDED PLATE GIRDER BRIDGE
102'-6" END SPANS 131'-0" INTERIOR SPAN
SUPERSTRUCTURE DETAILS
STATION: 462+88.56 (℄ S.B. LANE, U.S. NO. 561) NOV. 1978
SCOTT COUNTY
IOWA DEPARTMENT OF TRANSPORTATION-HIGHWAY DIVISION
DESIGN SHEET NO. 17 OF 29 FILE NO. 25588 DESIGN NO. 980

SCOTT COUNTY

PROJECT NUMBER	STATE	FED. ROAD DIST. NO.	FISCAL YEAR	SHEET NO.	TOTAL SHEETS
	IOWA	5		49	125

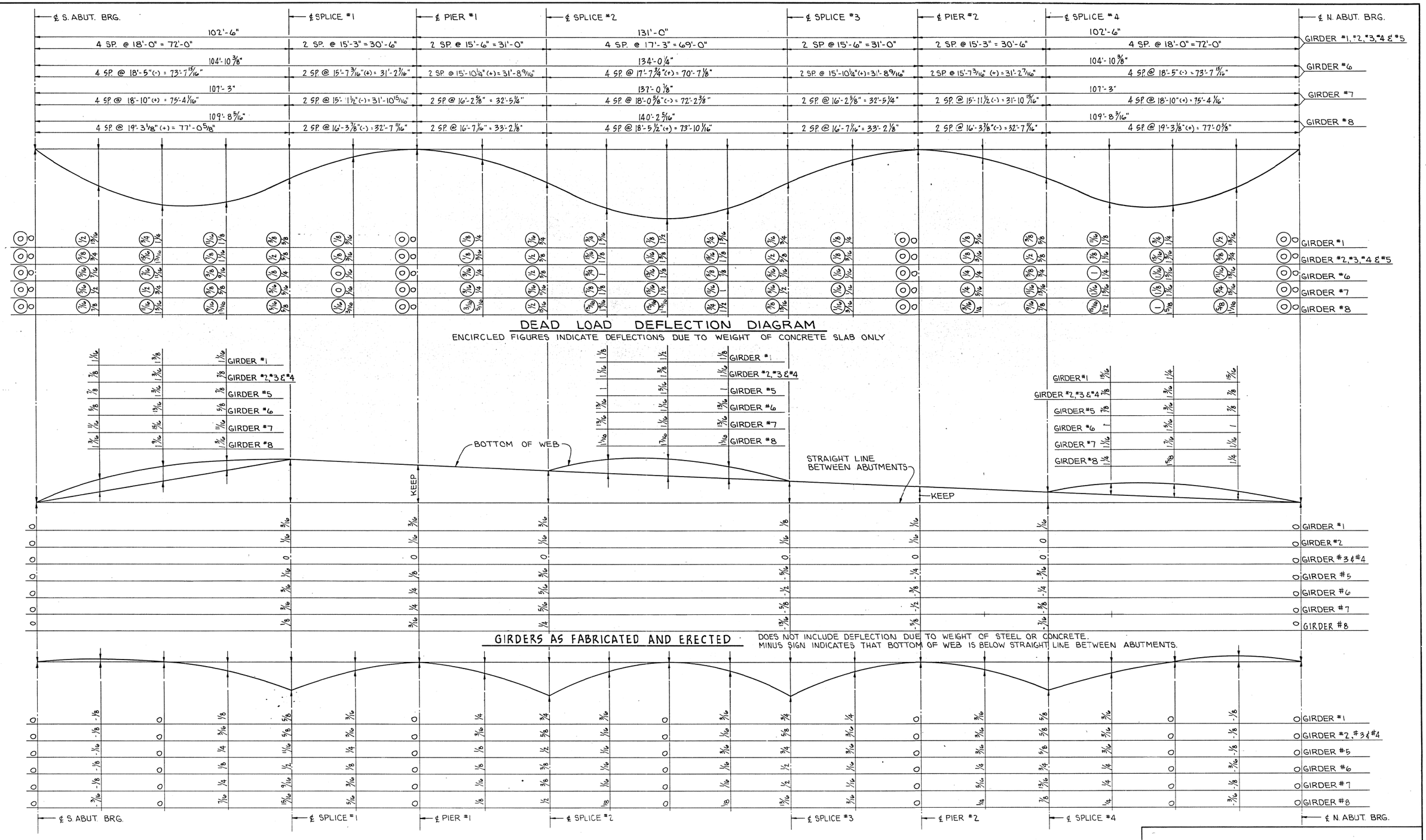

HAUNCH THICKENING DIAGRAM

FOR ESTIMATING PURPOSES ONLY. MINUS VALUE INDICATES HAUNCH THINNING

DESIGN FOR 57°03'00" SKEW
336'-0" X VARI. CONTINUOUS
WELDED PLATE GIRDER BRIDGE
102'-6" END SPANS 131'-0" INTERIOR SPAN
SUPERSTRUCTURE DETAILS
STATION: 462+88.56 (℄ S.B. LANE. U.S. NO. 561) NOV. 1978
SCOTT COUNTY
IOWA DEPARTMENT OF TRANSPORTATION-HIGHWAY DIVISION
DESIGN SHEET NO. 18 OF 29 FILE NO. 25588 DESIGN NO. 980

SCOTT COUNTY

PROJECT NUMBER	STATE	FED. ROAD DIST. NO.	FISCAL YEAR	SHEET NO.	TOTAL SHEETS
	IOWA	5		50	125

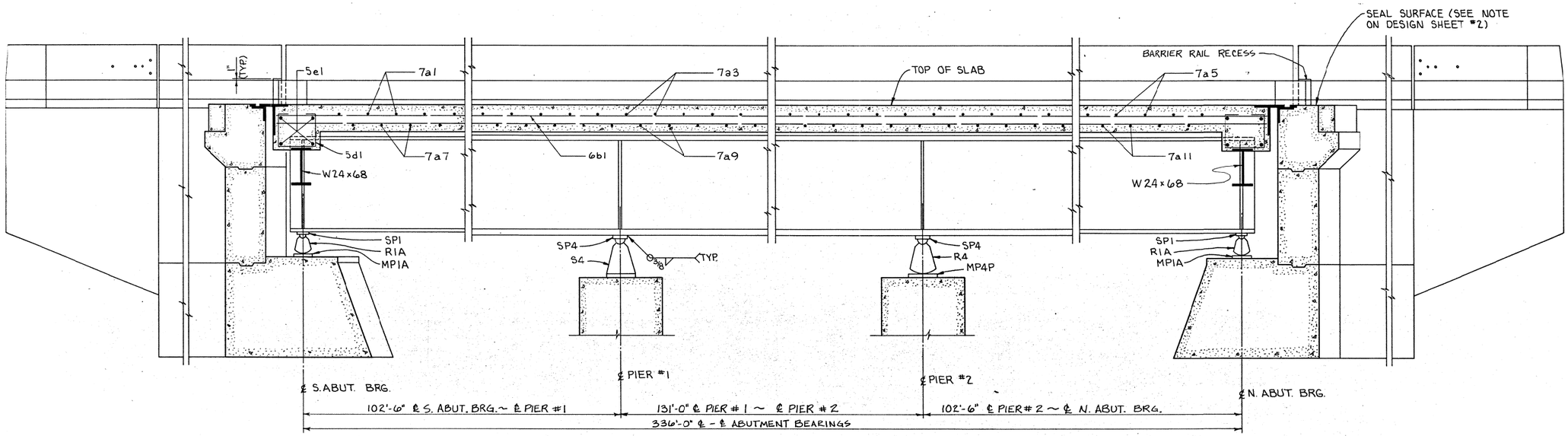

PART LONGITUDINAL SECTION NEAR EXTERIOR GIRDER

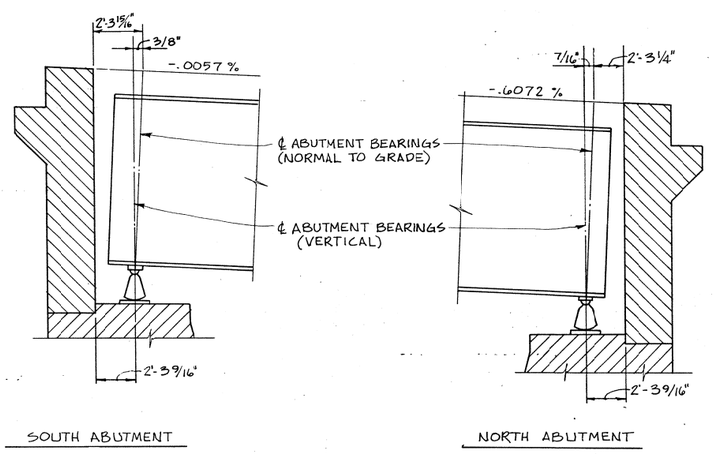

PART LONGITUDINAL SECTION
(SHOWING GRADE VARIATIONS ALONG ℄ SOUTHBOUND ROADWAY AT ABUTMENTS)

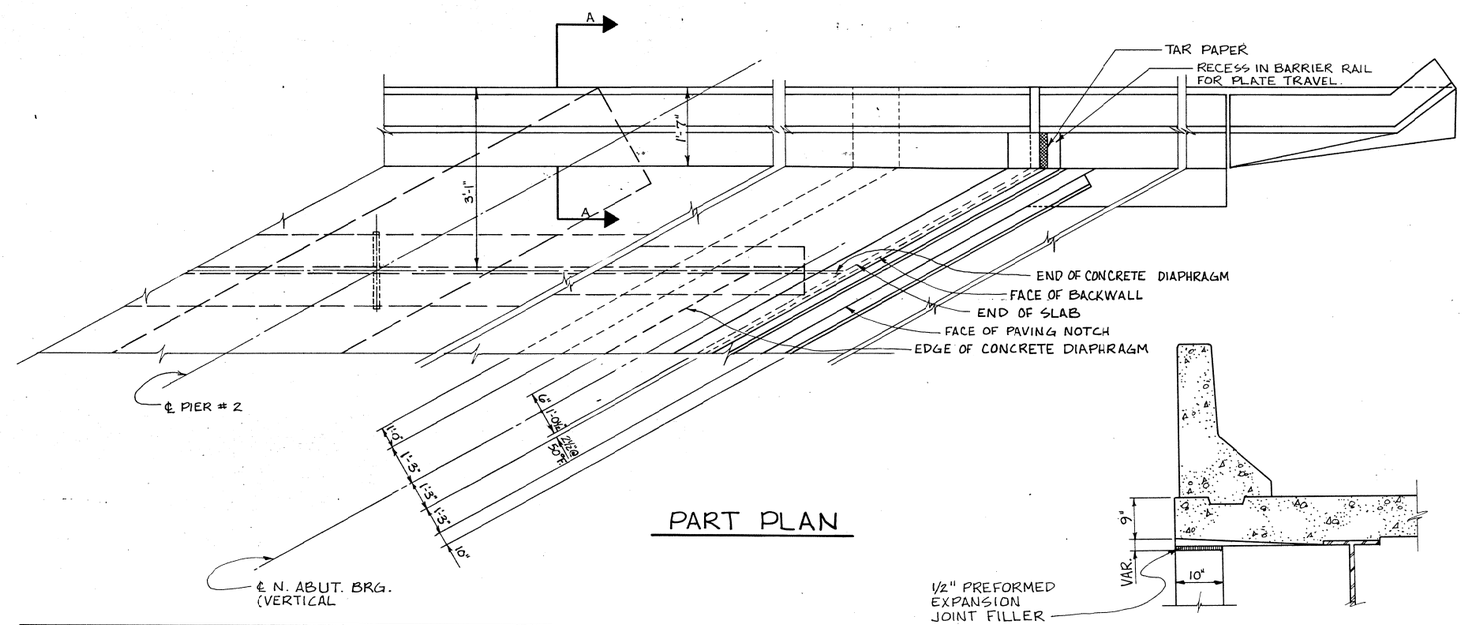

PART PLAN

SECTION A-A

ROCKER AND EXPANSION PLATE SETTINGS

TEMP. @ TIME OF SETTING (F)	SOUTH ABUTMENT NORMAL	SOUTH ABUTMENT	PIER #1	PIER #2	NORTH ABUTMENT	NORTH ABUTMENT
10°	2 13/16"	-5/16"	-	-7/16"	-3/4"	3 1/4"
50°	2 1/2"	0	-	0	0	2 1/2"
90°	2 3/16"	+5/16"	-	+7/16"	+3/4"	1 3/4"

NOTE: TILT ROCKERS IN DIRECTION SHOWN FOR TEMP. ABOVE 50°F. AND IN THE OPPOSITE DIRECTION FOR TEMP. BELOW 50°. SETTINGS FOR OTHER TEMP. ARE PROPORTIONAL.

DESIGN FOR 57°03'00" SKEW
336'-0" X VARI. CONTINUOUS
WELDED PLATE GIRDER BRIDGE
102'-6" END SPANS 131'-0" INTERIOR SPAN
SUPERSTRUCTURE DETAILS
STATION: 462+88.56 (℄ S.B. LANE, U.S. NO. 561) NOV. 1978
SCOTT COUNTY
IOWA DEPARTMENT OF TRANSPORTATION-HIGHWAY DIVISION
DESIGN SHEET NO. 19 OF 29 FILE NO. 25588 DESIGN NO. 980

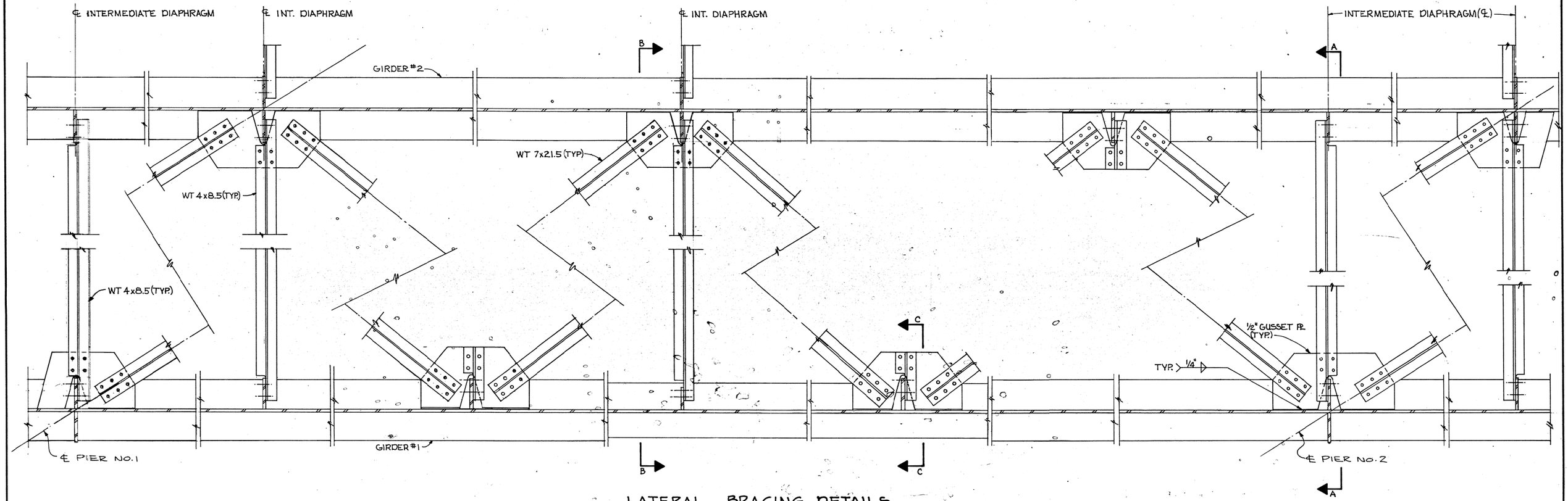

LATERAL BRACING DETAILS

(SEE SHT. NO. 15 FOR STRUCTURAL STEEL LAYOUT
TYPICAL FOR LATERAL BRACING BETWEEN GIRDERS 4 & 5).

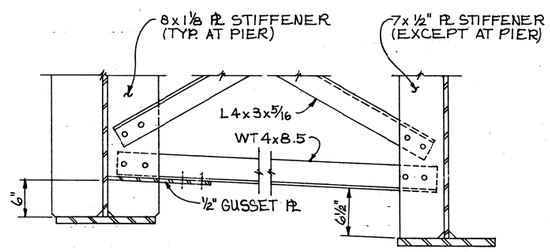

SECTION A-A

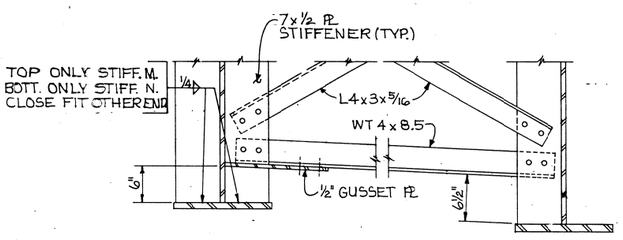

SECTION B-B

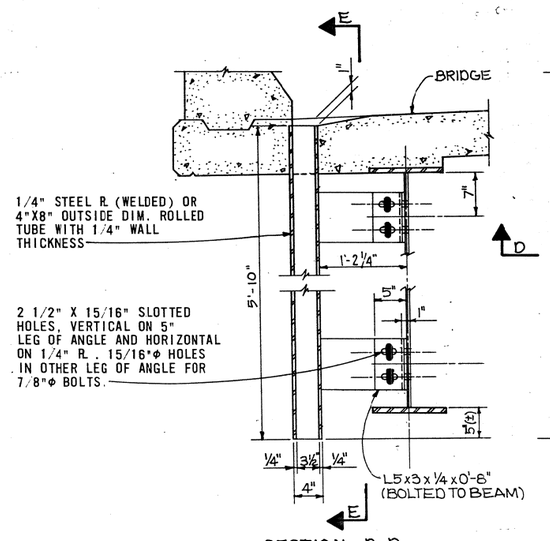

SECTION D-D

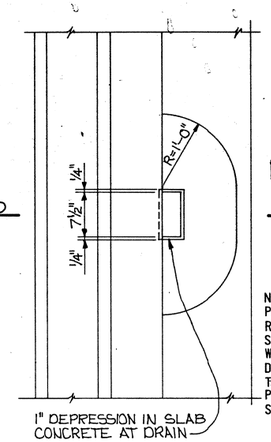

PART PLAN

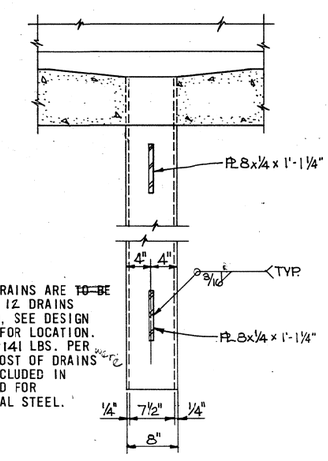

NOTE: DRAINS ARE ~~TO BE~~ PAINTED. 12 DRAINS REQUIRED, SEE DESIGN SHT. #1 FOR LOCATION. WEIGHT = 141 LBS. PER DRAIN, COST OF DRAINS ~~TO BE~~ INCLUDED IN PRICE BID FOR STRUCTURAL STEEL.

SECTION E-E

DRAIN DETAILS

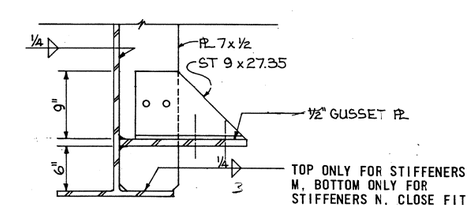

INTERMEDIATE GUSSET STIFFENER

SECTION C-C

DESIGN FOR 57°03'00" SKEW
336'-0" X VARI. CONTINUOUS
WELDED PLATE GIRDER BRIDGE
102'-6" END SPANS 131'-0" INTERIOR SPAN
SUPERSTRUCTURE DETAILS
STATION: 462+88.56 (℄ S.B. LANE, U.S. NO. 561) NOV. 1978
SCOTT COUNTY
IOWA DEPARTMENT OF TRANSPORTATION-HIGHWAY DIVISION
DESIGN SHEET NO. 20 OF 29 FILE NO. 25588 DESIGN NO. 980

SCOTT COUNTY

PROJECT NUMBER	STATE	FED. ROAD DIST. NO.	FISCAL YEAR	SHEET NO.	TOTAL SHEETS
	IOWA	5		52	~~125~~
				53	130

FINAL

EPOXY-COATING NOTES:

ALL TOP OF SLAB REINFORCING STEEL, BOTH LONGITUDINAL AND TRANSVERSE BARS, ~~SHALL BE~~ were EPOXY-COATED IN ACCORDANCE WITH CURRENT SPECIAL PROVISIONS AND SUPPLEMENTAL SPECIFICATIONS OF THE IOWA D.O.T. HIGHWAY DIVISION.

FROM THE REINFORCING BAR LIST SHOWN ON THIS SHEET, THE FOLLOWING BARS ~~SHALL BE~~ were EPOXY-COATED:

ALL OF THE 7a1 BARS = 5807
ALL OF THE 7a2 BARS = 23,877
ALL OF THE 7a3 BARS = 17,936
ALL OF THE 7a4 BARS = 4131
369 OF THE 6b1 BARS = 21,661
156 OF THE 6b2 BARS = 9372
104 OF THE 6b3 BARS = 5558
ALL OF THE 5d1 BARS = 289
ALL OF THE 7a5 BARS = 1377
ALL OF THE 7a6 BARS = 3663

6 OF THE 5e1 BARS = 221
6 OF THE 5e2 BARS = 278
EAST BARRIER RAIL = 6887
WEST BARRIER RAIL = 7402

TOTAL = 108,459 LBS. ~~TO BE~~ EPOXY-COATED

~~ESTIMATED~~ QUANTITIES - SUPERSTRUCTURE

ITEM	UNIT	QUANTITY
STRUCTURAL CONCRETE, CLASS "D"	CU. YD.	556.8
REINFORCING STEEL	LBS.	87,876
△REINFORCING STEEL - EPOXY COATED	LBS.	108,459
* STRUCTURAL STEEL - A36	LBS	719,075

△ INCLUDES QUANTITIES FOR THE BARRIER RAIL INCLUDING THE END SECTIONS (SEE DESIGN SHEET NO. 27 & 28)

* INCLUDES 1692 LBS. OF DRAINS AND 614 LBS. OF LEAD PLATES.

CONCRETE PLACEMENT QUANTITIES

LOCATION	SIDE A	SIDE B
SECTION 1	48.1	64.0
SECTION 2	69.9	61.8
SECTION 3	54.4	58.3
SECTION 4	44.0	51.7
SECTION 5	52.9	51.7
TOTAL(CU. YD.)	269.3	287.5

REINFORCING STEEL - SUPERSTRUCTURE

BAR	LOCATION	SHAPE	NO.	LENGTH	WEIGHT
7a1	SLAB, TRANSVERSE, TOP	———	103	VARIES	5807
7a2	SLAB, TRANSVERSE, TOP	———	326	VARIES	23,877
7a3	SLAB, TRANSVERSE, TOP	———	326	26'-11"	17,936
7a4	SLAB, TRANSVERSE, TOP	———	49	41'-3"	4131
7a5	SLAB, TRANSVERSE, TOP	———	49	VARIES	1377
7a6	SLAB, TRANSVERSE, TOP	———	84	VARIES	3663
7a7	SLAB, TRANSVERSE, BOTTOM	———	102	VARIES	5751
7a8	SLAB, TRANSVERSE, BOTTOM	———	327	VARIES	20,887
7a9	SLAB, TRANSVERSE, BOTTOM	———	327	31'-6"	21,054
7a10	SLAB, TRANSVERSE, BOTTOM	———	58	36'-8"	4347
7a11	SLAB, TRANSVERSE, BOTTOM	———	58	VARIES	1887
7a12	SLAB, TRANSVERSE, BOTTOM	———	74	VARIES	2899
6b1	SLAB, LONGITUDINAL	———	684	39'-1"	40,153
6b2	SLAB, LONGITUDINAL	———	282	40'-0"	16,943
6b3	SLAB, LONGITUDINAL	———	188	35'-7"	10,048
5d1	SLAB HOOPS @ ABUTMENT DIAPHRAGM	[ ]	64	4'-4"	289
5e1	SLAB TRANSVERSE @ ABUT. DIAPHRAGM	———	12	35'-3"	441
5e2	SLAB TRANSVERSE @ ABUT. DIAPHRAGM	———	12	44'-5"	556
	EAST BARRIER RAIL(SEE DES.SHT.27)				6887
	WEST BARRIER RAIL(SEE DES.SHT.28)				7402
SEE EPOXY COATING NOTES ON THIS SHEET				TOTAL(LBS.)	196,335

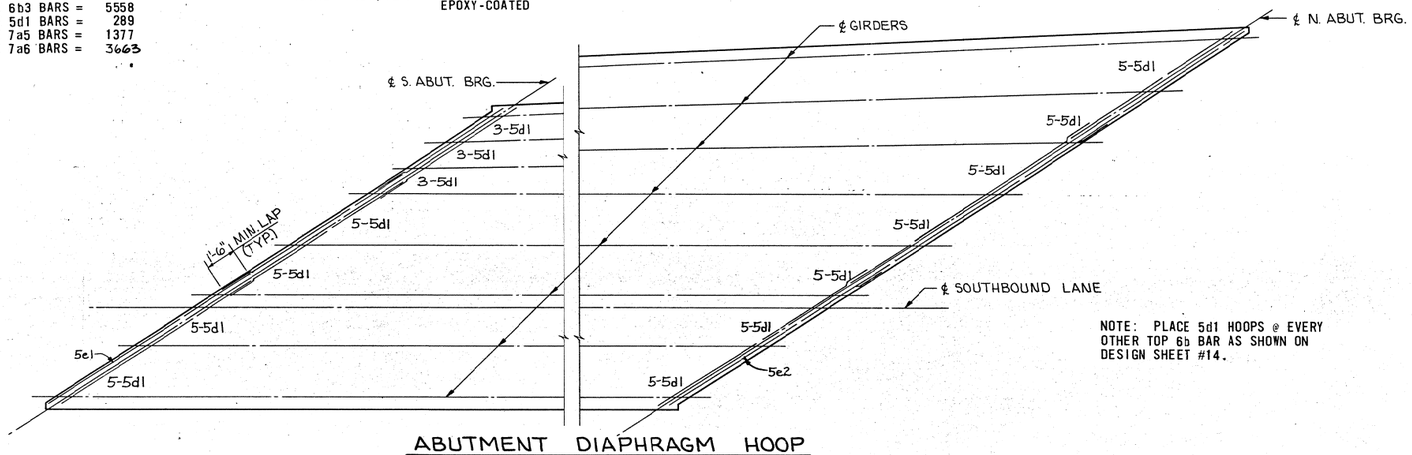

NOTE: PLACE 5d1 HOOPS @ EVERY OTHER TOP 6b BAR AS SHOWN ON DESIGN SHEET #14.

ABUTMENT DIAPHRAGM HOOP PLACEMENT DIAGRAM

BENT BAR DETAILS

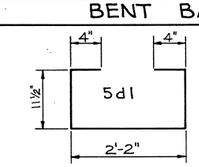

NOTE:
ALL DIMENSIONS ARE OUT TO OUT.

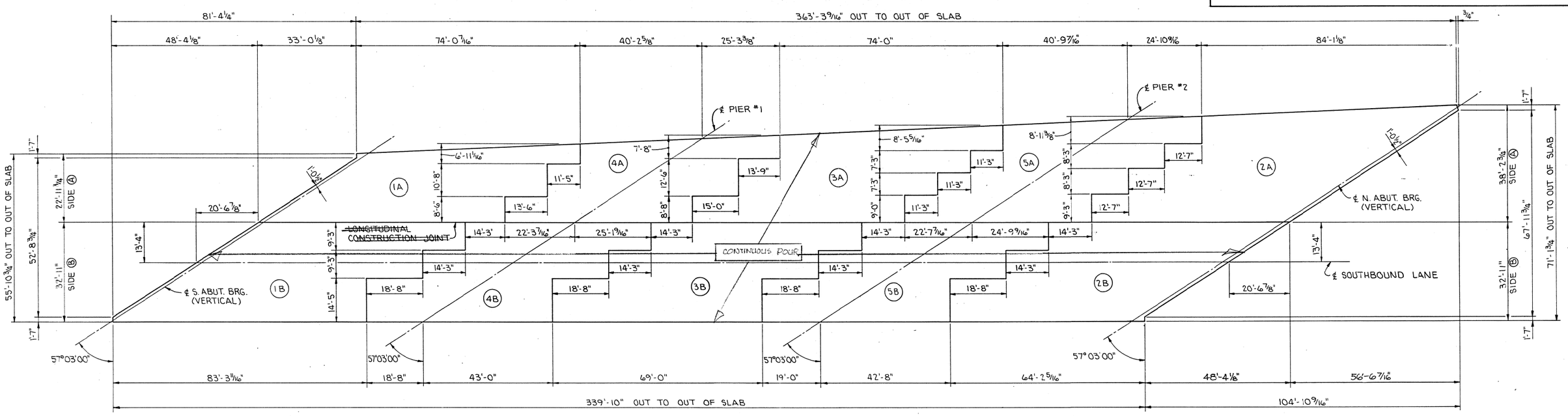

CONCRETE PLACEMENT DIAGRAM

NOTE:
~~ROADWAY SLAB SHALL BE PLACED IN SECTIONS AND IN SEQUENCE INDICATED BY ENCIRCLED NUMBERS ON PLACEMENT DIAGRAM AND PREFERABLY AT INTERVALS NOT EXCEEDING 24 HOURS~~. ALL SLAB REINFORCING STEEL ~~IS TO BE~~ IN PLACE BEFORE ~~ANY~~ SECTION ~~IS~~ POURED. ALTERNATE PROCEDURES FOR PLACING CONCRETE ~~MAY BE~~ MUST BE SUBMITTED FOR APPROVAL, TOGETHER WITH A STATEMENT OF THE PROPOSED METHOD AND EVIDENCE THAT THE CONTRACTOR POSSESSES THE NECESSARY EQUIPMENT AND FACILITIES TO ACCOMPLISH THE REQUIRED RESULT.

DESIGN FOR 57°03'00" SKEW
336'-0" X VARI. CONTINUOUS
WELDED PLATE GIRDER BRIDGE
102'-6" END SPANS 131'-0" INTERIOR SPAN
SUPERSTRUCTURE DETAILS
STATION: 462+88.56 (℄ S.B. LANE, U.S. NO. 561) NOV.1978
SCOTT COUNTY
IOWA DEPARTMENT OF TRANSPORTATION-HIGHWAY DIVISION
DESIGN SHEET NO. 21 OF 29 FILE NO. 25588 DESIGN NO. 980

SCOTT COUNTY

PROJECT NUMBER	STATE	FED. ROAD DIST. NO.	FISCAL YEAR	SHEET NO.	TOTAL SHEETS
	IOWA	5		53	125

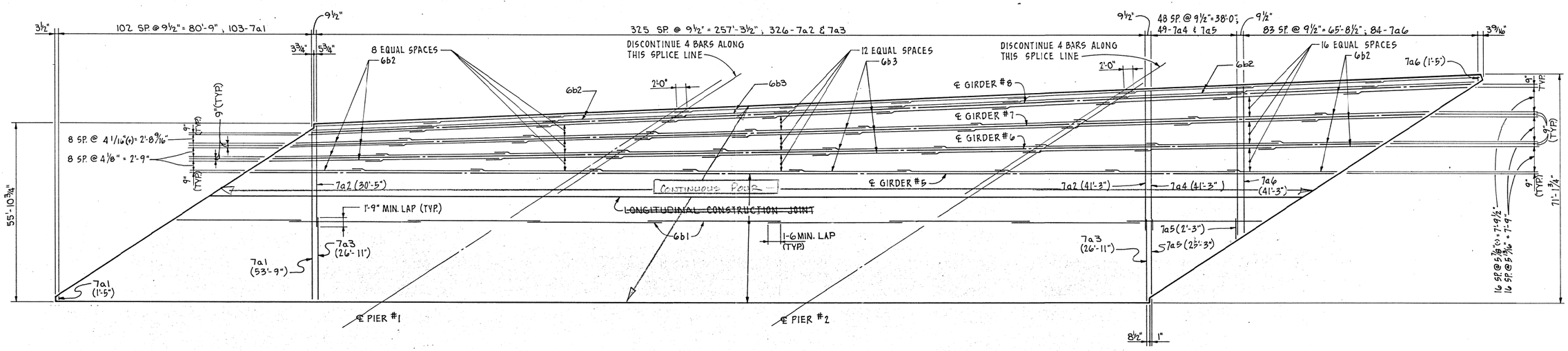

LONGITUDINAL AND TOP OF SLAB TRANSVERSE REINFORCING LAYOUT

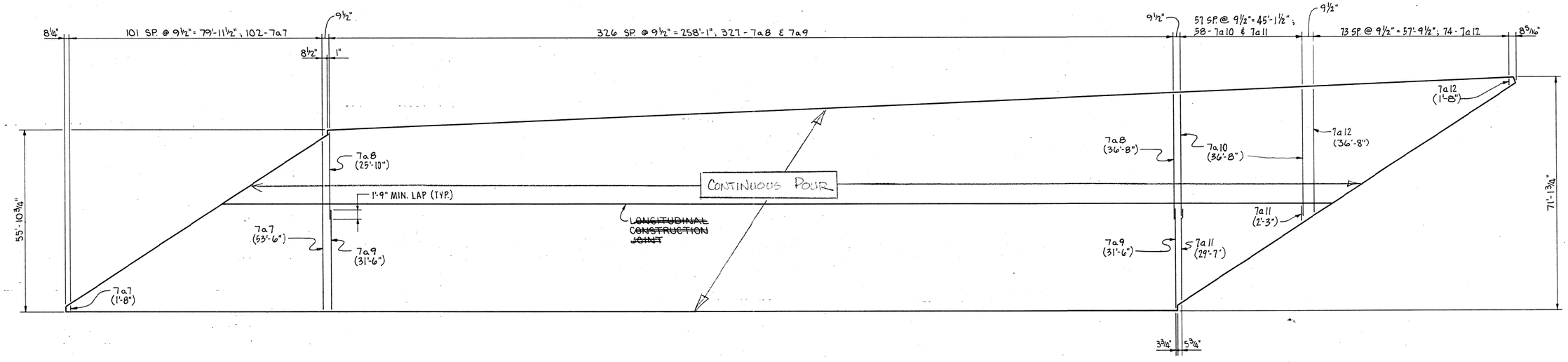

BOTTOM OF SLAB TRANSVERSE REINFORCING LAYOUT

NOTE:

CONTRACTOR ~~HAS~~ HAS THE OPTION TO SPLICE BARS OVER 40'-0" LONG. SPLICE LOCATIONS ~~ARE TO~~ WERE BE APPROVED BY THE ENGINEER. PAYMENT FOR REINFORCING BARS ~~SHALL BE~~ WERE BASED ON NO SPLICES AND NO ALLOWANCE ~~SHALL BE~~ MADE FOR THE ADDITIONAL LENGTH OF BAR REQUIRED FOR THE USE OF SPLICES.

DESIGN FOR 57°03'00" SKEW
336'-0" X VARI. CONTINUOUS
WELDED PLATE GIRDER BRIDGE
102'-6" END SPANS 131'-0" INTERIOR SPAN
SUPERSTRUCTURE DETAILS
STATION: 462+88.56 (℄ S.B. LANE, U.S. NO. 561) NOV. 1978
SCOTT COUNTY
IOWA DEPARTMENT OF TRANSPORTATION-HIGHWAY DIVISION
DESIGN SHEET NO. 22 OF 29 FILE NO. 25588 DESIGN NO. 980

SCOTT COUNTY

PROJECT NUMBER	STATE	FED. ROAD DIST. NO.	FISCAL YEAR	SHEET NO.	TOTAL SHEETS
	IOWA	5		54	125

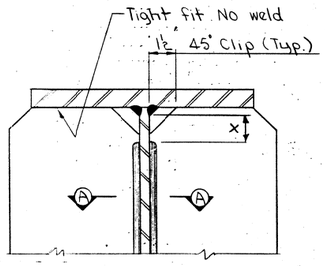

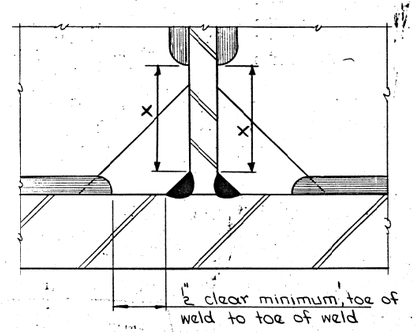

DETAIL A

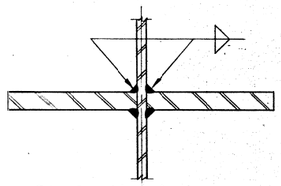

SECTION A-A

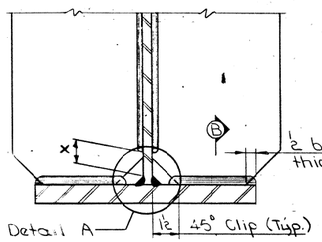

BEARING STIFFENER

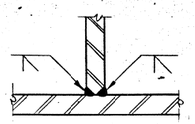

SECTION B-B

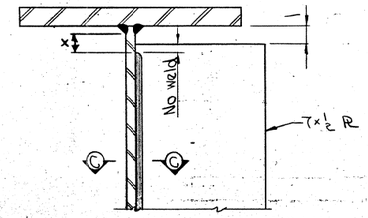

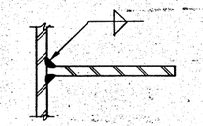

SECTION C-C

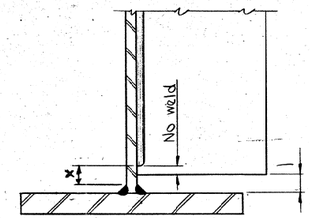

DIAPHRAGM STIFFENER

Note: Used where no intermediate stiffeners are required. If intermediate stiffeners are required the diaphragm stiffener is to be welded the same as the intermediate stiffeners.

Note: Diaphragm stiffeners are full depth for this design.

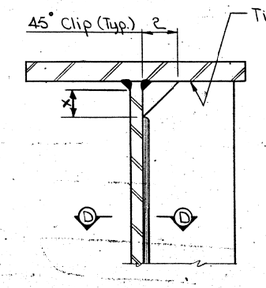

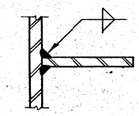

SECTION D-D

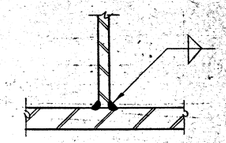

SECTION E-E

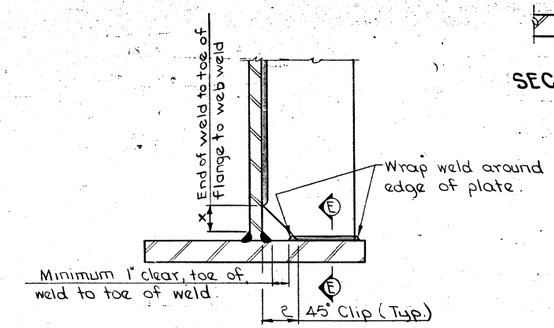

INTERMEDIATE STIFFENER

NOTE:
This sheet is primarily for the use of fabricator's workmen and Iowa Department of Transportation inspectors in interpreting plan details. It covers the locations of weld termini that are not specified by typical weld symbols.
The acceptability and use of the weld treatment shown on this sheet for any specific project is the responsibility of the designing engineer.

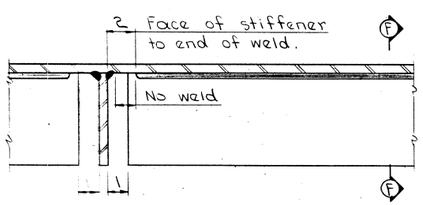

LONGITUDINAL STIFFENER

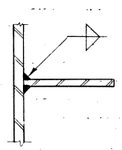

SECTION F-F

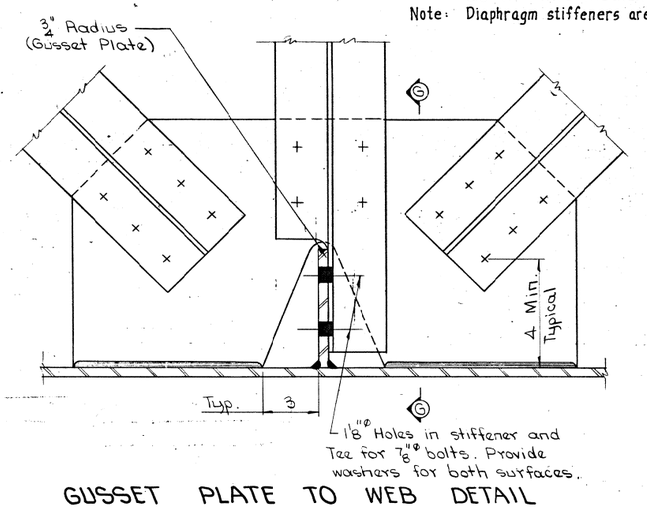

GUSSET PLATE TO WEB DETAIL

t ~ Web Thickness	X = 5t
3/8	1 7/8
7/16	2 3/16
1/2	2 1/2
9/16	2 13/16
5/8	3 1/8
11/16	3 7/16
3/4	3 3/4

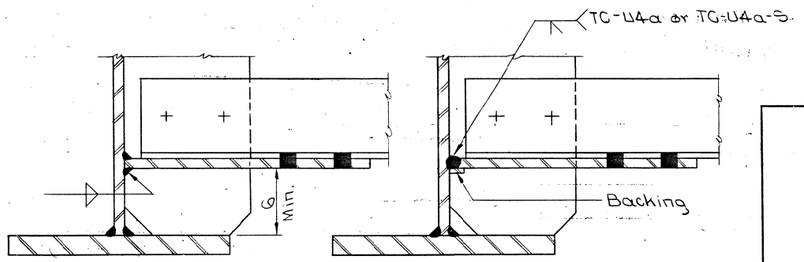

ALTERNATE SECTIONS G-G

DESIGN FOR 57°03'00" SKEW
336'-0" X VARI. CONTINUOUS
WELDED PLATE GIRDER BRIDGE
102'-6" END SPANS 131'-0" INTERIOR SPAN
WELDING DETAILS
STATION: 462+88.56 (℄ S.B. LANE, U.S. NO. 561) NOV. 1978
SCOTT COUNTY
IOWA DEPARTMENT OF TRANSPORTATION - HIGHWAY DIVISION
Design Sheet No.: 23 Of 29 File No.: 25588 Design No.: 980

Revised 8-1-77: Stiffener weld gap changed.
Revised 5-2-77: Gusset Plate to Web Details changed.

DESIGNED BY:	TRACED BY:	Welding Details	Standard Sheet 1021	SCOTT COUNTY	PROJECT NUMBER	STATE	FED. ROAD DIST. NO.	FISCAL YEAR	SHEET NO.	TOTAL SHEETS
DETAILED BY:	CHECKED BY:					IOWA	5		~~55~~ 56	~~125~~ 130

BRIDGE WORK SHEET 001 21660

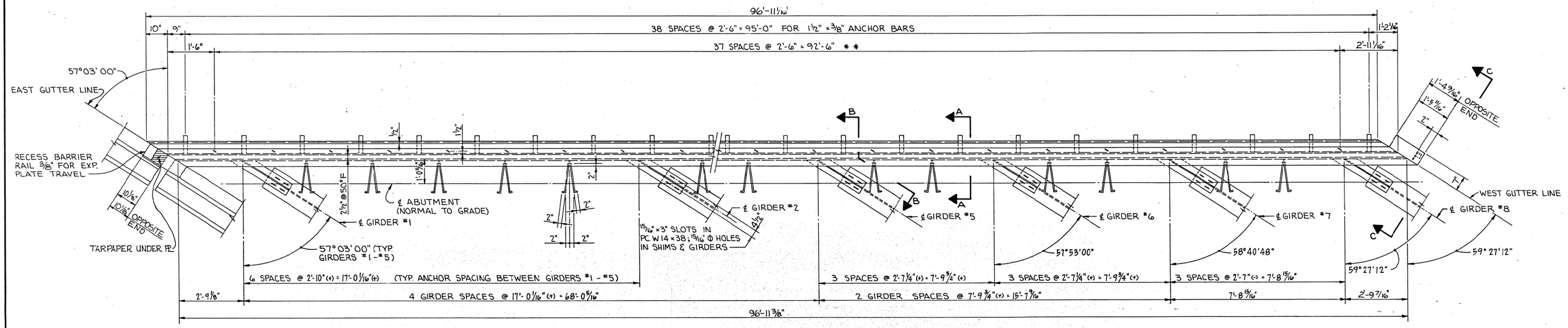

SOUTH ABUTMENT EXPANSION PLATE DETAILS

** 9/16" x 2" SLOTS IN 9 x 5/8 PL AND 9/16" Φ HOLES IN L6 x 4 x 3/8 FOR 1/2" Φ x 1 3/4" BOLTS (PROVIDE WASHER FOR EACH BOLT). WELD NUTS TO UNDERSIDE OF ANGLE AND REMOVE BOLTS WHEN CONCRETE HAS TAKEN ITS INITIAL SET. SLOTS ARE ~~TO BE~~ PLACED PARALLEL TO ROADWAY.

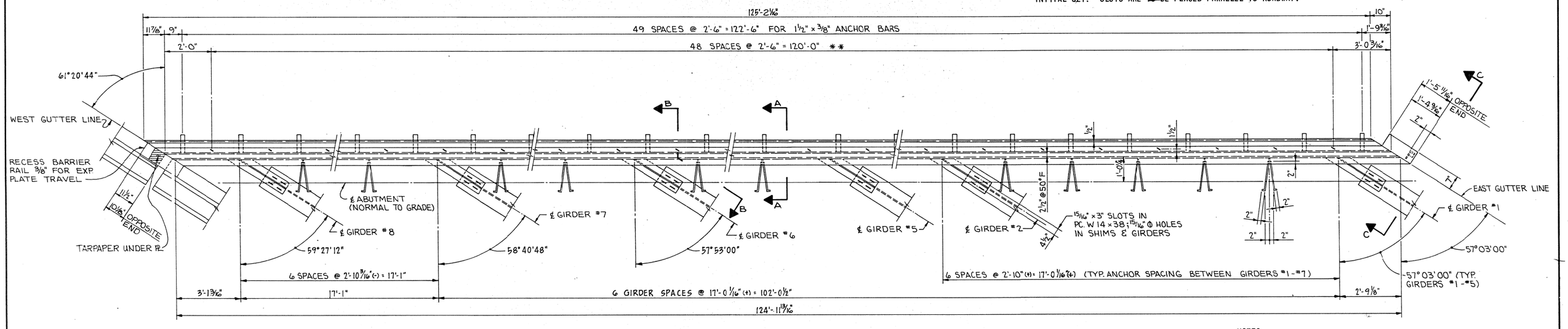

NORTH ABUTMENT EXPANSION PLATE DETAILS

NOTES:

DIMENSION "D" IS 2 1/2" FOR A TEMPERATURE OF 50°F. SEE ROCKER AND EXPANSION PLATE SETTING TABLE ON DESIGN SHEET 19 OF 29 FOR SETTINGS OF 10°F AND 90°F.

TWO PERMISSIBLE FIELD SPLICES MAY BE MADE IN ANY EXPANSION PLATE PROVIDING THE PIECES ARE JOINED WITH A PREQUALIFIED SINGLE GROOVE WELD AND ALL SURFACES NOT IN CONTACT WITH CONCRETE ARE GROUND FLUSH.

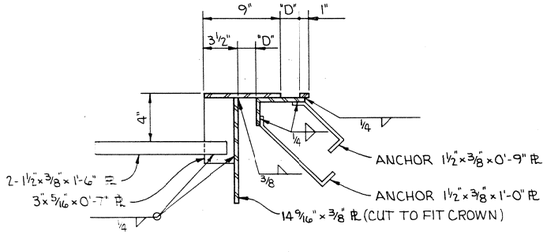

SECTION A-A

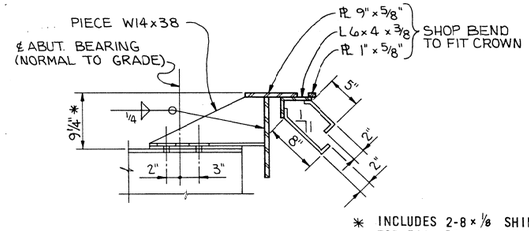

* INCLUDES 2-8 x 1/8 SHIMS (FURNISH 4 SHIMS FOR EACH PC. W14X38 SUPPORT)

SECTION B-B

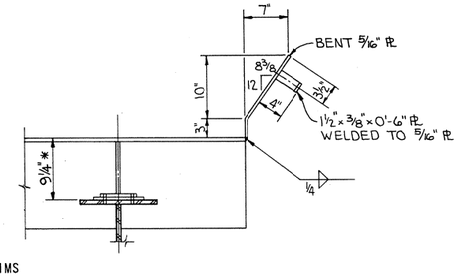

SECTION C-C

DESIGN FOR 57°03'00" SKEW
336'-0" X VARI. CONTINUOUS
WELDED PLATE GIRDER BRIDGE
102'-6" END SPANS 131'-0" INTERIOR SPAN
EXPANSION PLATE DETAILS
STATION: 462+88.56 (℄ S.B. LANE, U.S. NO. 561) NOV. 1978
SCOTT COUNTY
IOWA DEPARTMENT OF TRANSPORTATION-HIGHWAY DIVISION
DESIGN SHEET NO. 24 OF 29 FILE NO. 25588 DESIGN NO. 980

SCOTT COUNTY	PROJECT NUMBER	STATE	FED. ROAD DIST. NO.	FISCAL YEAR	SHEET NO.	TOTAL SHEETS
		IOWA	5		56	125

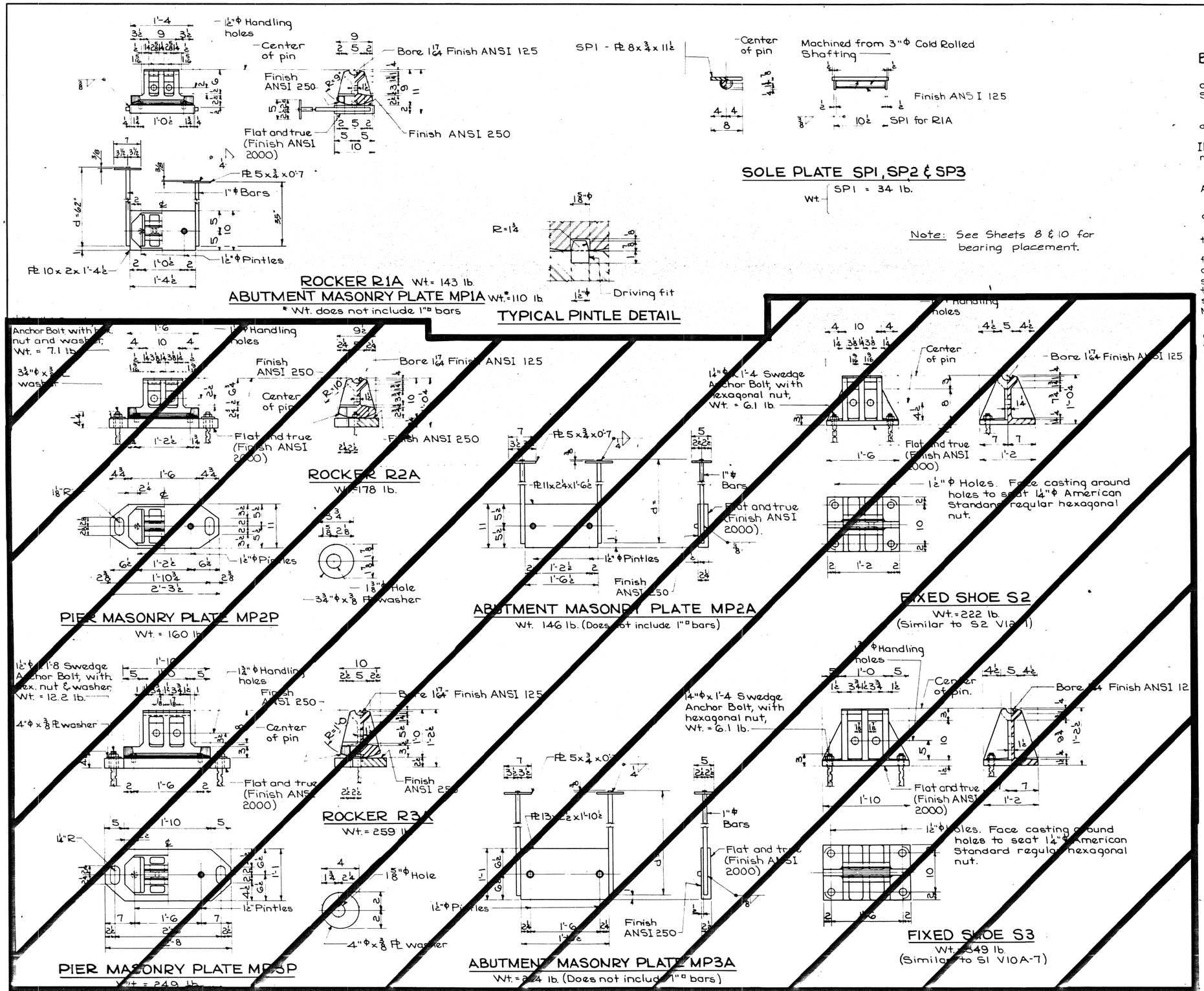

Note: See Sheets 8 & 10 for bearing placement.

BEARING NOTES:

The casting of R1A, ~~shall~~ clic comply with Article 4153.04 of the IDOT Standard Specifications. Castings may be Gray Iron or Nodular Iron.

The masonry plate marked MP1A, ~~shall~~ did comply with the requirements of ASTM A-36 steel.

The pins ~~shall~~ clic comply with Article 4153.02 of the IDOT Standard Specifications and with the requirements of ASTM A-108 steel.

Anchor bolts ~~shall be~~ were set in accordance with Article 2408.47 of the IDOT Standard Specifications.

All bearings are ~~to be~~ set on a ⅛" lead sheet in accordance with 2408.38 of the Specifications.

The weight of bearings shown does not include the weight of paint.

As soon as the surfacing process is done, the surfaces finished with an ANSI 125 finish ~~shall be~~ were shop coated with an application of waterproof National Lubricating Grease Institute Nº3 multipurpose grease. Just before the erection of the structural steel in the field, the shop coated surfaces ~~are to be~~ were wiped clean and a field coat of N.L.G.I. Nº3 grease is to be applied.

Masonry plate MP1A ~~shall be~~ was galvanized after the 1"Φ bars ~~have~~ had been welded to the masonry plates.

After masonry plates, rockers and shoes are in correct location, fill slotted holes around anchor bolts with a sulphur-based compound or epoxy resin adhesive in accordance with Article 2408.47 of the Standard Specifications.

DISTANCE FROM TOP OF SOLE PLATE TO BRIDGE SEAT	
Rockers & Fixed Shoes	* D
R1A	1'-0¾
~~R2A & S2~~	~~1'-2~~
~~R3A & S3~~	~~1'-2½~~

* Including ⅛" lead sheet.

MAXIMUM REACTION (In Kips)	
R1A	~~R2A S2~~ ~~R3A S3~~
132	~~71~~ ~~262~~

DESIGN FOR 57°03'00" SKEW
336'-0" X VARI. CONTINUOUS
WELDED PLATE GIRDER BRIDGE
102'-6" END SPANS 131'-0" INTERIOR SPAN
BEARING DETAILS
STATION: 462+88.56(℄ S.B. LANE, U.S. NO. 561) NOV. 1978
SCOTT COUNTY
IOWA DEPARTMENT OF TRANSPORTATION- HIGHWAY DIVISION
Design Sheet Nº 25 Of 29 File Nº 25588 Design Nº 98C

Revision (7-6-64) Finish on shoes and masonry plates in contact with concrete added.
Revision (6-1-65) Specifications for Rocker and Shoe material clarified.
Revision (7-8-71) Note concerning galvanizing of abutment masonry plates added.
Revision (3-28-72) ASA changed to ANSI.
Revision (11-22-72) Note concerning finishing changed.
Revision (8-29-77) Agency updated. Notes concerning material to fill slots, and seating of bearings changed.

DESIGNED BY:	TRACED BY:	BEARING STANDARD	STANDARD SHEET 1008	SCOTT COUNTY	PROJECT NUMBER
DETAILED BY:	CHECKED BY:				

STATE	FED. ROAD DIST. Nº	FISCAL YEAR	SHEET Nº	TOTAL SHEETS
IOWA	5		57	125

DIETZGEN NO 131 ARKWRIGHT

Revision (4-2-77) Clamping holes added to masonry plates.

Revision (12-12-62) Pintle size changed.
Revision (7-6-64) Finish [illegible] changed.
Revision (5-27-65) Weights for MP4P, MP5Pa and MP5Pb changed.
Revision (6-20-66) Nodular Iron Casting ASTM number and grade changed.
Revision (3-28-72) ASA changed to ANSI.
Revision (11-22-72) Note concerning finishing changed.
Revision (7-11-73) Material for Rockers, Shoes and Masonry Plates changed.
Revision (8-29-77) Notes concerning material to fill slots and seating of bearings changed.

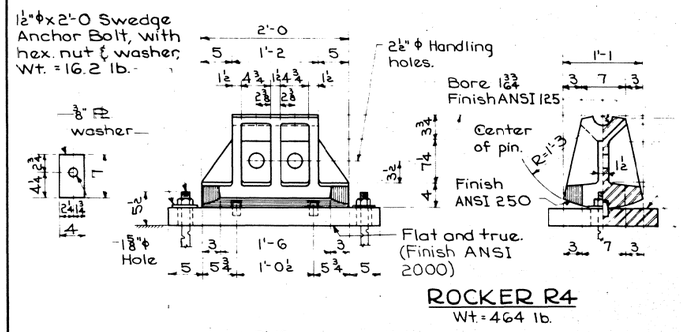

ROCKER R4
Wt. = 464 lb.

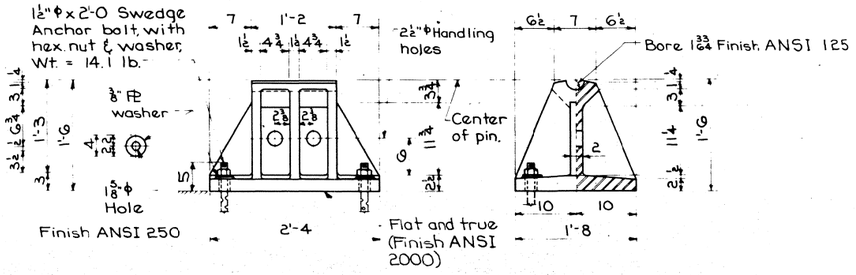

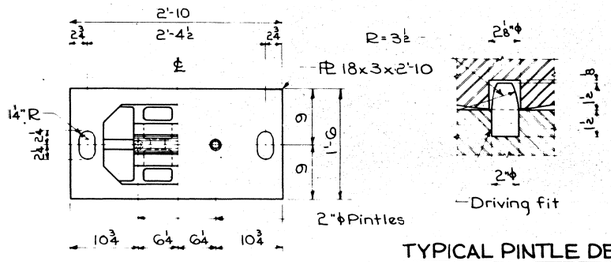

TYPICAL PINTLE DETAIL

PIER MASONRY PLATE MP4P
Wt. = 462 lb.

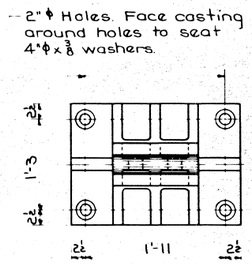

FIXED SHOE S4
Wt. = 735 lb.

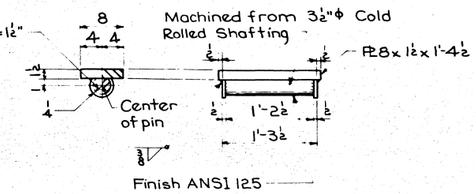

SOLE PLATES SP4 FOR R4 & S4
Wt. = 85 lb.

Note: See Sheets 5 & 6 for bearing placement.

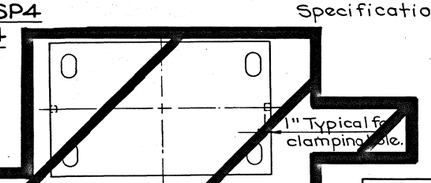

MP5Pa

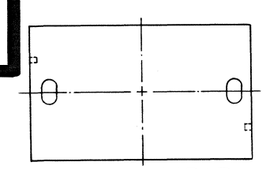

MP4P

Permissible cored hole (1¼"φ x 1" deep) may be introduced to facilitate clamping to the milling table. The cored hole should be located at mid depth of plate.

PERMISSIBLE CLAMPING HOLES

BEARING NOTES:

Castings R4 and R4 ~~shall be~~ were Nodular Iron Castings complying with Article 4153.04 of the Standard Specifications.

Masonry plate MP4P ~~shall be~~ were either Nodular Iron Castings complying with Article 4153.04 or structural steel complying with ASTM A-588, except that the supplementary requirement S1 (Impact Properties) of AASHO M222 shall not apply.

All plates and bars ~~shall~~ did comply with ASTM A-36. Pins ~~shall~~ were comply with Article 4153.02 of the Standard Specifications and with ASTM A-108.

Anchor bolts ~~shall be~~ were set in accordance with Article 2408.47 of the Standard Specifications.

All bearings are ~~to be~~ set on a ⅛" lead sheet in accordance with Article 2408.38 of the Specifications.

The weight of bearings shown does not include the weight of paint.

As soon as the surfacing process is done, the surfaces finished with an ANSI 125 finish ~~shall be~~ were shop coated with an application of waterproof National Lubricating Grease Institute Nº 3 multipurpose grease. Just before the erection of the structural steel in the field, the shop coated surfaces ~~are to be~~ were wiped clean and a field coat of N.L.G.I. Nº 3 grease is to be applied.

After masonry plates, rockers and shoes are in correct location, fill slotted holes around anchor bolts with a sulphur-based compound or epoxy resin adhesive in accordance with Article 2408.47 of the Standard Specifications.

DISTANCE FROM TOP OF SOLE PLATE TO BRIDGE SEAT	
Rockers & Fixed Shoes	* D
R4 & S4	1'-8⅝

* Including ⅛" lead sheet.

MAXIMUM REACTION (In Kips)	
R4 S4	R5
475	650

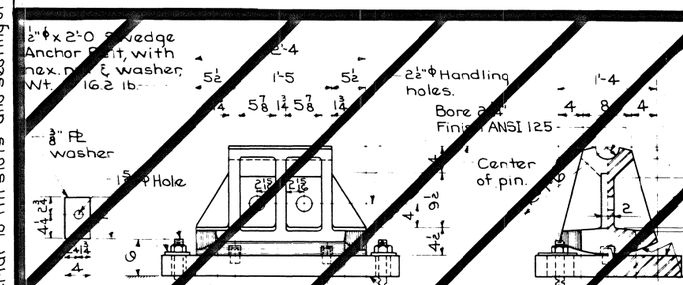

ROCKER R5
Wt. = 776 lb.

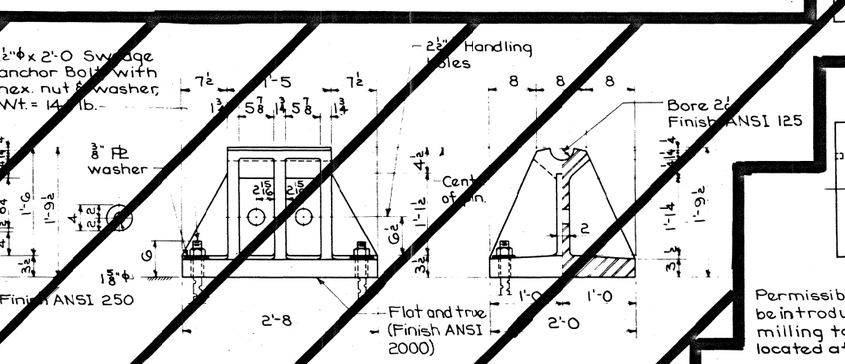

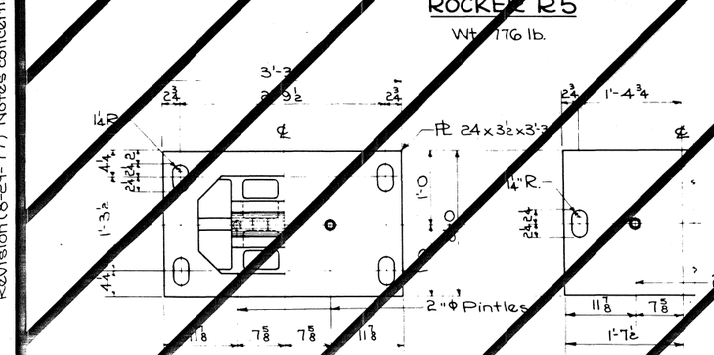

PIER MASONRY PL MP5Pa FOR SPAN LENGTH GREATER THAN 150'
Wt. = 823 lb

PIER MASONRY PL MP5Pb FOR SPAN LENGTH 101' TO 150'
Wt. = 825 lb

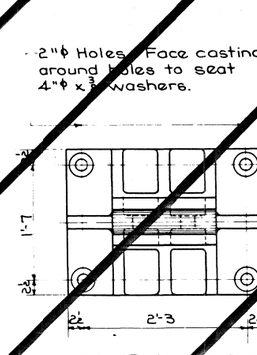

FIXED SHOE S5
Wt. = 1774 lb.

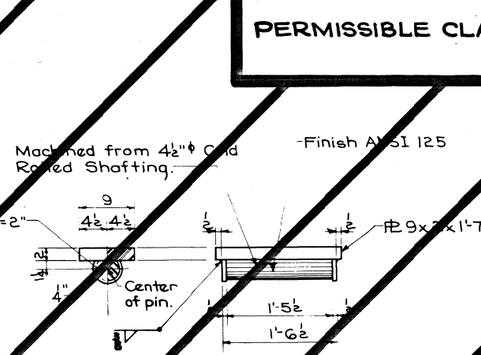

SOLE PLATES SP5 FOR R5 & S5
Wt. = 159 lb.

DESIGN FOR 57°03'00" SKEW
336'-0" X VARI. CONTINUOUS
WELDED PLATE GIRDER BRIDGE
102'-6" END SPANS 131'-0" INTERIOR SPAN
BEARING DETAILS
STATION: 462+88.56 (℄ S.B. LANE. U.S. NO. 561) NOV. 1978
SCOTT COUNTY
IOWA DEPARTMENT OF TRANSPORTATION - HIGHWAY DIVISION
Design Sheet Nº 26 Of 29 File Nº 25588 Design Nº 980

DESIGNED BY: TRACED BY:
DETAILED BY: CHECKED BY:

BEARING STANDARD | STANDARD SHEET 1009 | SCOTT COUNTY | PROJECT NUMBER

STATE	FED. ROAD DIST. Nº	FISCAL YEAR	SHEET Nº	TOTAL SHEETS
IOWA	5		58	125

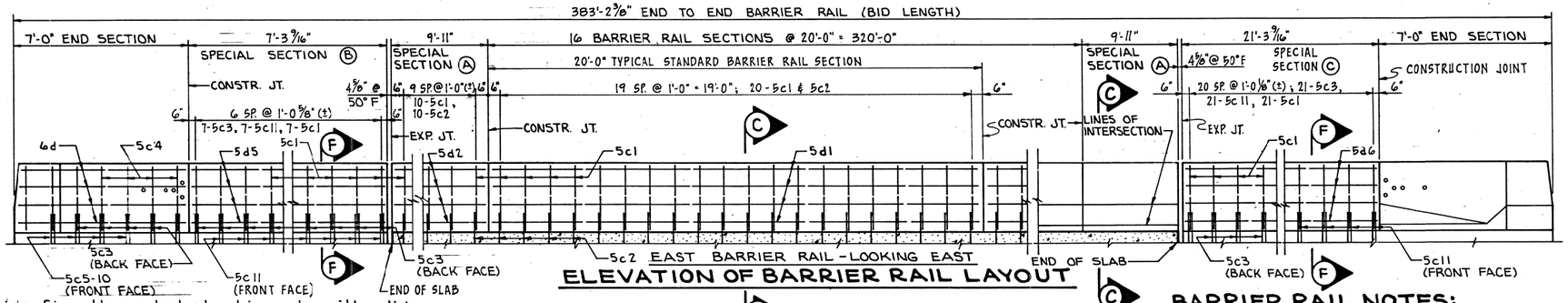

ELEVATION OF BARRIER RAIL LAYOUT

Provide five threaded steel inserts with solid bottom to fit 7/8 x 2 galvanized cap screws with galvanized round washers. Cost of inserts ~~to be~~ included in price bid for "Structural Concrete". Screws and washers are not a part of this contract.

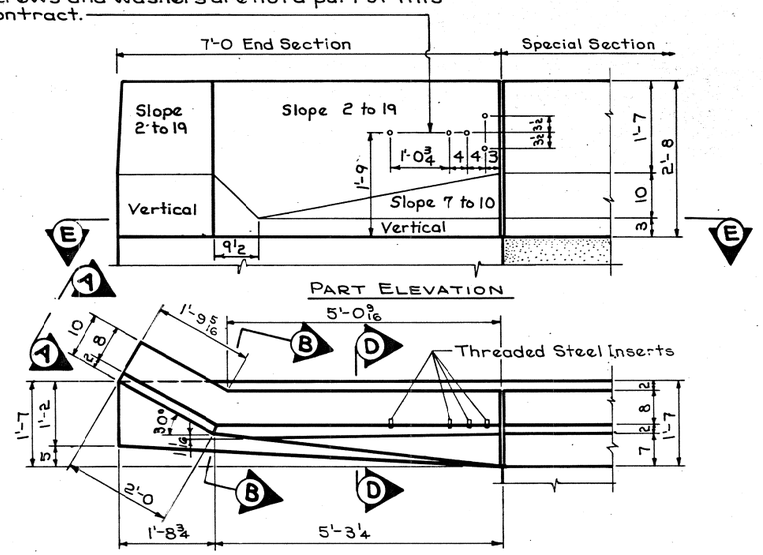

DETAILS OF END SECTION

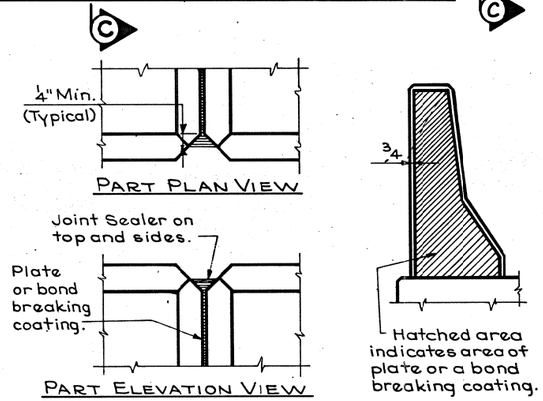

BARRIER RAIL JOINT DETAILS

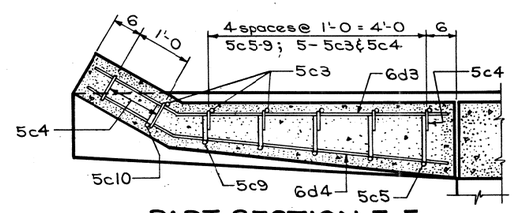

PART SECTION E-E

BARRIER RAIL NOTES:

Minimum clear distance from face of concrete to near reinforcing bar is ~~to be~~ 2" unless otherwise noted or shown.

All exposed corners 90° or sharper ~~are to be~~ were filleted with a 3/4" dressed and beveled strip.

Top of the barrier rail is ~~to be~~ parallel to the theoretical ℄ grade.

The barrier rail ~~may be~~ was placed ~~in sections or~~ continuously. ~~When it is placed continuously, a 1/8 inch sheet of either aluminum, galvanized steel, high density styrene, or plexiglass shall be placed at the joints to separate the sections. When the barrier rail is placed in sections, the end of the section to be poured against is to be coated with paraffin or other bond breaker approved by the Engineer and the plate separators may be omitted.~~

The joint sealer ~~shall~~ conform to Fed. Spec. TT-S00230 or TT-S00227 for Type II, Class A or B.

Cost of the joint sealer and bond breaker ~~shall be~~ was considered incidental to other construction.

The concrete barrier rail ~~is to be~~ was bid on a lineal foot basis measured from end to end of rail. The number of lineal feet of barrier rail installed ~~will be~~ was paid for at the contract price per lineal foot based on plan quantities. Price bid for Concrete Barrier Rail ~~shall be~~ was full compensation for furnishing all material, excluding reinforcing steel, and all of the equipment and labor required to erect the rail in accordance with these plans and current specifications. All barrier rail reinforcing steel is ~~to be~~ included with the superstructure reinforcing steel.

All barrier rail concrete is ~~to be~~ Class D.

All barrier rail reinforcing steel is ~~to be~~ epoxy-coated.

NOTE:

Cross Sectional Area of the Special Section and Standard Section of the Barrier Rail = 2.47 square feet.

REINFORCING STEEL - ONE SECTION

Section	Bar	Location	Shape	Nº	Length	Weight
STANDARD SECTION	5c1	VERTICAL		20	5'-5"	113
	5c2	VERTICAL		20	4'-10"	101
	5d1	LONGITUDINAL		7	19'-8"	144
	TOTAL FOR ONE SECTION			TOTAL (LB.)		358
7'-0" END SECTION	5c3	VERTICAL		6	2'-6"	16
	5c4	VERTICAL		7	5'-5"	40
	5c5-10	VERTICAL		6	VARIES	18
	6d3	LONGITUDINAL		6	6'-7"	59
	6d4	LONGITUDINAL		1	6'-10"	10
	TOTAL FOR ONE SECTION			TOTAL (LB.)		143
SPECIAL SECTIONS (ALL REINFORCING REQUIRED)	5c1	VERTICAL		48	5'-5"	271
	5c2	VERTICAL		20	4'-10"	101
	5c3	VERTICAL		28	2'-6"	73
	5c11	VERTICAL		28	2'-11"	85
	5d2	LONGIT-SPECIAL SECTIONS (A)		14	9'-7"	140
	5d5	LONGIT-SPECIAL SECTIONS (B)		7	6'-11"	50
	5d6	LONGIT-SPECIAL SECTIONS (C)		7	20'-11"	153
	TOTAL LBS. FOR ALL SPECIAL SECTIONS			TOTAL (LB.)		873

BENT BAR DETAILS

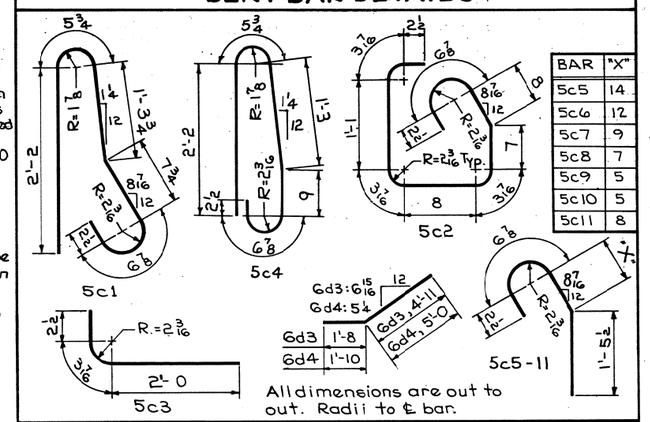

BAR	"X"
5c5	14
5c6	12
5c7	9
5c8	7
5c9	5
5c10	5
5c11	8

EPOXY REINFORCING SUMMARY

Section	Number of Sections	Reinforcing Per Section	Total
Standard	16	358	5728
End	2	143	286
Special	4	-	873
(Include with Superstructure Reinforcing)		Total (lb.)	6887

CONCRETE PLACEMENT SUMMARY

Section	Number of Sections	Concrete Per Section	Total
Standard	16	1.83	29.3
End	2	.58	1.2
Special (A)	2	.91	1.8
Special (B)	1	.67	.7
Special (C)	1	1.95	1.9
		Total (c.y.)	34.9

CONCRETE BARRIER RAILS QUANTITIES

Item	Unit	Quantity
EAST CONCRETE BARRIER RAIL	L.F.	383.2

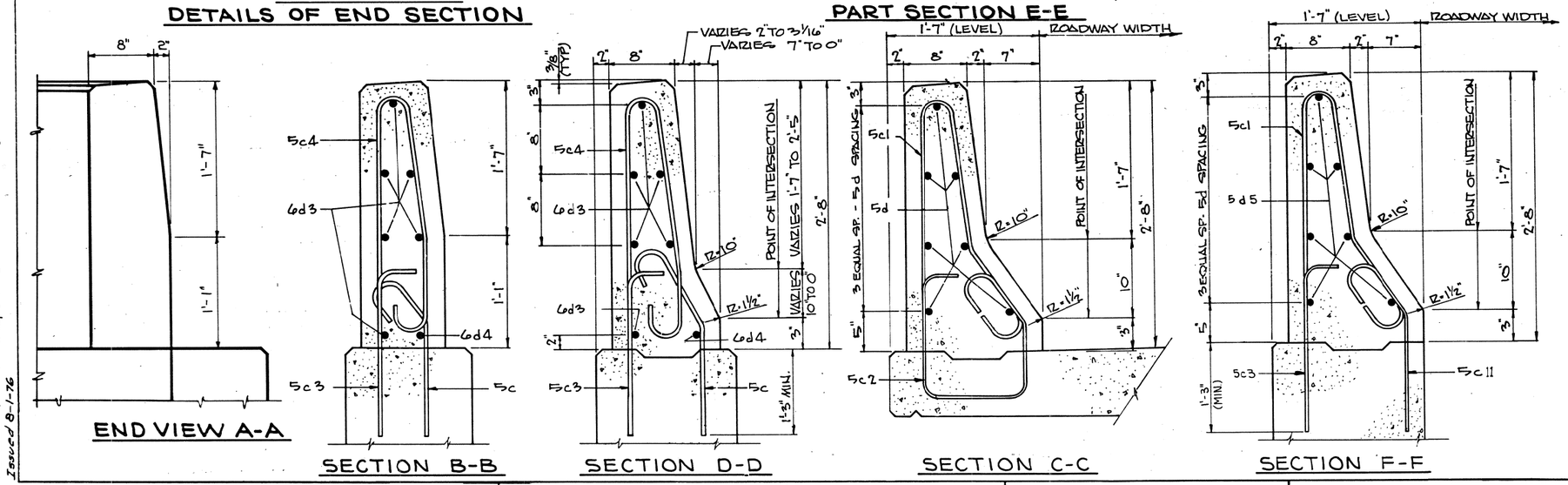

DESIGN FOR 57°03'00" SKEW
336'-0" X VARI. CONTINUOUS
WELDED PLATE GIRDER BRIDGE
102'-6" END SPANS 131'-0" INTERIOR SPAN
EAST CURB - BARRIER RAIL
STATION: 462+88.56 (℄ S.B. LANE, U.S. NO. 561) NOV. 1978
SCOTT COUNTY
IOWA DEPARTMENT OF TRANSPORTATION-HIGHWAY DIVISION
DESIGN SHEET NO. 27 OF 29 FILE NO. 25588 DESIGN NO 980

Revised 5-31-77: Reinforcing bars to be epoxy coated after bending, size of d bars changed.
Revised 12-27-76: Joint bond breakers changed. Joint sealer specification added.
Revised 9-1-76: Shape of end section changed. Bid item changed. Note added. End section reinforcing bars changed.
Issued 8-1-76

DESIGNED BY:	TRACED BY:	BARRIER RAIL -	BRIDGES (WITHOUT SURFACING)	STANDARD SHEET	SCOTT COUNTY	PROJECT NUMBER	STATE	FED. ROAD DIST. NO.	FISCAL YEAR	SHEET NO.	TOTAL SHEETS
DETAILED BY:	CHECKED BY:						IOWA	5		59	125

130

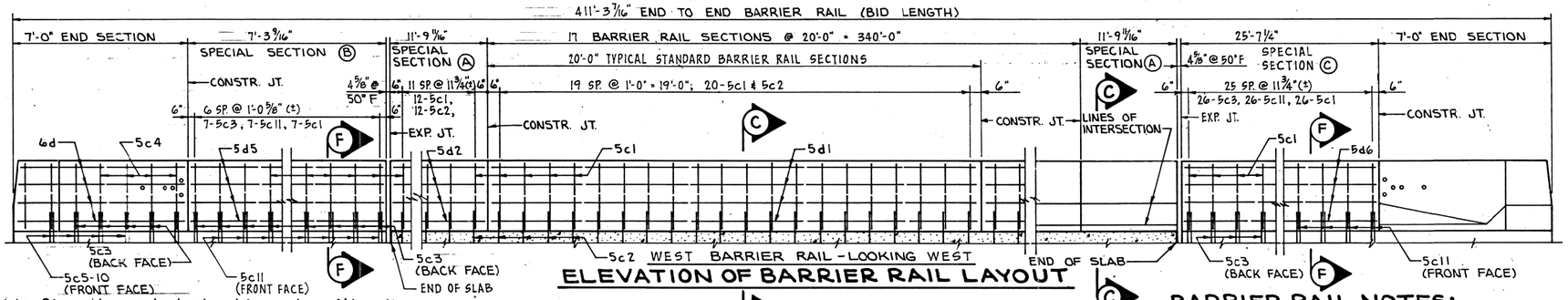

ELEVATION OF BARRIER RAIL LAYOUT

Provide five threaded steel inserts with solid bottom to fit 7/8 x 2 galvanized cap screws with galvanized round washers. Cost of inserts ~~to be~~ included in price bid for "Structural Concrete". Screws and washers are not a part of this contract.

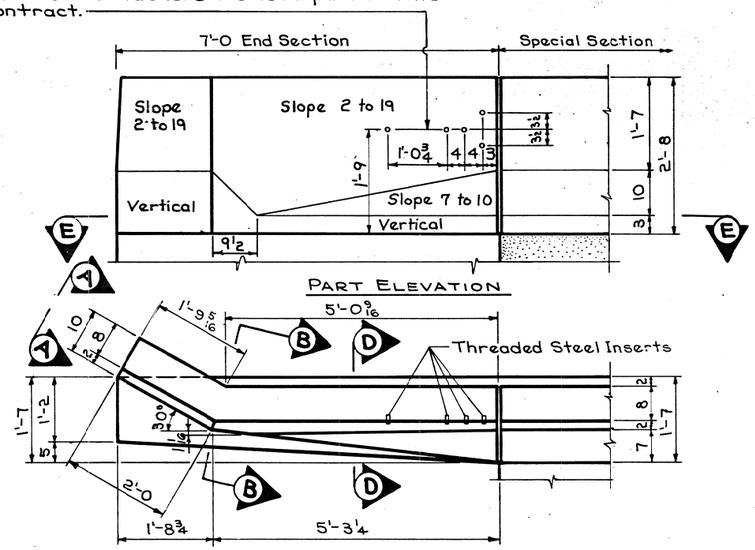

DETAILS OF END SECTION

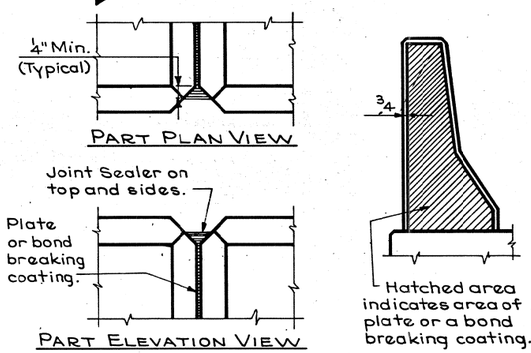

BARRIER RAIL JOINT DETAILS

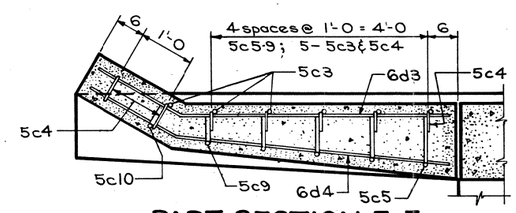

PART SECTION E-E

BARRIER RAIL NOTES:

Minimum clear distance from face of concrete to near reinforcing bar is ~~to be~~ 2" unless otherwise noted or shown.

All exposed corners 90° or sharper ~~are to be~~ were filleted with a 3/4" dressed and beveled strip.

Top of the barrier rail is ~~to be~~ parallel to the theoretical ℄ grade.

The barrier rail ~~may be~~ was placed ~~in sections or~~ continuously. ~~When it is placed continuously a 1/8 inch sheet of either aluminum, galvanized steel, high density styrene, or plexiglass shall be placed at the joints to separate the sections. When the barrier rail is placed in sections the end of the section to be poured against is to be coated with paraffin or other bond breaker approved by the Engineer and the plate separators may be omitted.~~

The joint sealer ~~shall~~ conform to Fed. Spec. TT-S00230 or TT-S00227 for Type II, Class A or B.

Cost of the joint sealer and bond breaker ~~shall be~~ was considered incidental to other construction.

The concrete barrier rail ~~is to be~~ was bid on a lineal foot basis measured from end to end of rail. The number of lineal feet of barrier rail installed ~~will be~~ was paid for at the contract price per lineal foot based on plan quantities. Price bid for Concrete Barrier Rail ~~shall be~~ was full compensation for furnishing all material, excluding reinforcing steel, and all of the equipment and labor required to erect the rail in accordance with these plans and current specifications. All barrier rail reinforcing steel is ~~to be~~ included with the superstructure reinforcing steel.

All barrier rail concrete is ~~to be~~ Class D.

All barrier rail reinforcing steel is ~~to be~~ epoxy-coated.

NOTE:

Cross Sectional Area of the Special Section and Standard Section of the Barrier Rail = 2.47 square feet.

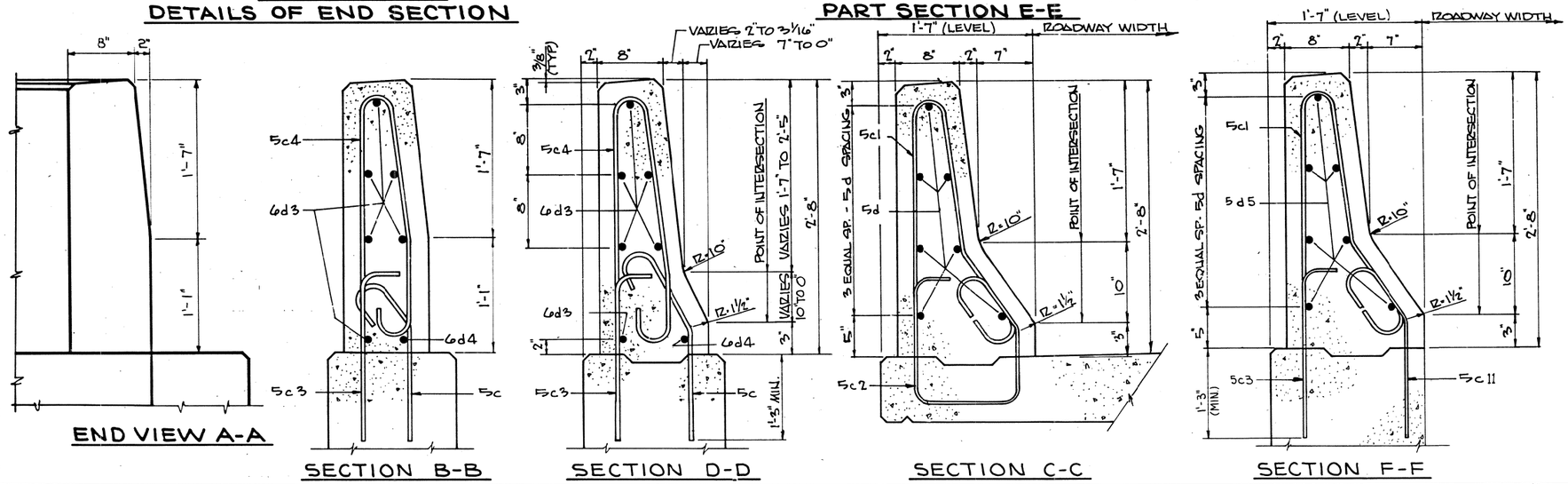

REINFORCING STEEL - ONE SECTION

Section	Bar	Location	Shape	№	Length	Weight
STANDARD SECTION	5c1	VERTICAL		20	5'-5"	113
	5c2	VERTICAL		20	4'-10"	101
	5d1	LONGITUDINAL		7	19'-8"	144
	TOTAL FOR ONE SECTION			TOTAL (LB.)		358
7'-0" END SECTION	5c3	VERTICAL		6	2'-6"	16
	5c4	VERTICAL		7	5'-5"	40
	5c5-10	VERTICAL		6	VARIES	18
	6d3	LONGITUDINAL		6	6'-7"	59
	6d4	LONGITUDINAL		1	6'-10"	10
	FOR ONE SECTION			TOTAL (LB.)		143
SPECIAL SECTIONS (ALL REINFORCING REQUIRED)	5c1	VERTICAL		57	5'-5"	322
	5c2	VERTICAL		24	4'-10"	121
	5c3	VERTICAL		33	2'-6"	86
	5c11	VERTICAL		33	2'-11"	100
	5d2	LONGIT-SPECIAL SECTIONS (A)		14	11'-5"	167
	5d5	LONGIT-SPECIAL SECTIONS (B)		7	6'-11"	50
	5d6	LONGIT-SPECIAL SECTIONS (C)		7	25'-3"	184
	TOTAL LBS. FOR ALL SPECIAL SECTIONS			TOTAL (LB.)		1030

BENT BAR DETAILS

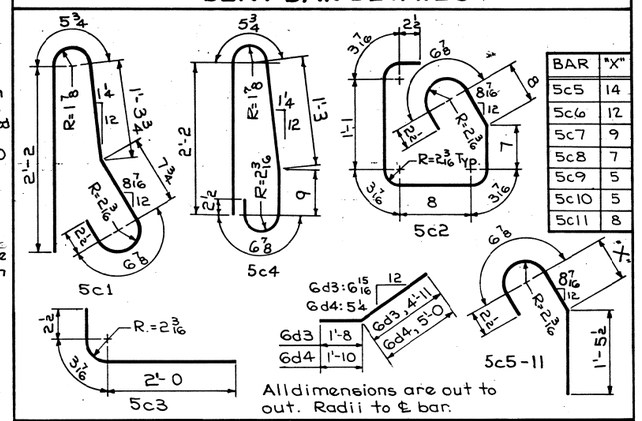

BAR	"X"
5c5	14
5c6	12
5c7	9
5c8	7
5c9	5
5c10	5
5c11	8

EPOXY REINFORCING SUMMARY

Section	Number of Sections	Reinforcing Per Section	Total
Standard	17	358	6086
End	2	143	286
Special	4	-	1030
(Include with Superstructure Reinforcing)		Total (lb.)	7402

CONCRETE PLACEMENT SUMMARY

Section	Number of Sections	Concrete Per Section	Total
Standard	17	1.83	31.1
End	2	.58	1.2
Special (A)	2	1.08	2.2
Special (B)	1	.67	.7
Special (C)	1	2.34	2.3
		TOTAL (C.Y.)	37.5

CONCRETE BARRIER RAIL QUANITIES

Item	Unit	Quantity
West Concrete Barrier Rail	L.F.	411.3

DESIGN FOR 57°03'00" SKEW
336'-0" X -VARI. CONTINUOUS
WELDED PLATE GIRDER BRIDGE
102'-6" END SPANS 131'-0" INTERIOR SPAN
WEST CURB - BARRIER RAIL
STATION: 462+88.56 (℄ S.B. LANE U.S. NO. 561) NOV. 1978
SCOTT COUNTY
IOWA DEPARTMENT OF TRANSPORTATION-HIGHWAY DIVISION
DESIGN SHEET NO. 28 OF 29 FILE NO. 25588 DESIGN NO 980

Revised 5-31-77: Reinforcing bars to be epoxy coated after bending size of d bars changed.
Revised 12-27-76: Joint bond breakers changed. Joint sealer specification added.
Revised 9-1-76: Shape of end section changed. Bid item changed. Note added. End section reinforcing bars changed.
Issued 8-1-76

DESIGNED BY: DETAILED BY: TRACED BY: CHECKED BY:

BARRIER RAIL - BRIDGES (WITHOUT SURFACING) STANDARD SHEET SCOTT COUNTY

PROJECT NUMBER	STATE	FED. ROAD DIST. NO.	FISCAL YEAR	SHEET NO.	TOTAL SHEETS
	IOWA	5		60	125

130

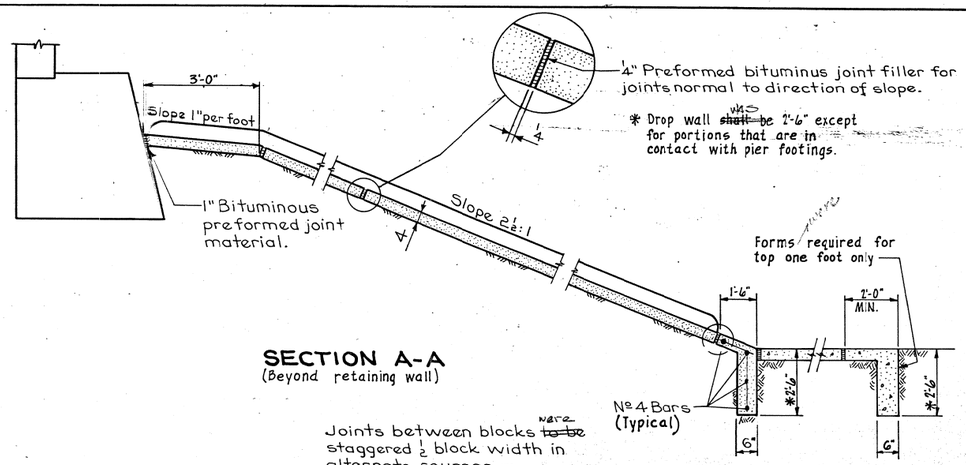

SECTION A-A
(Beyond retaining wall)

Note: Drop wall ~~is~~ was not required behind retaining wall.

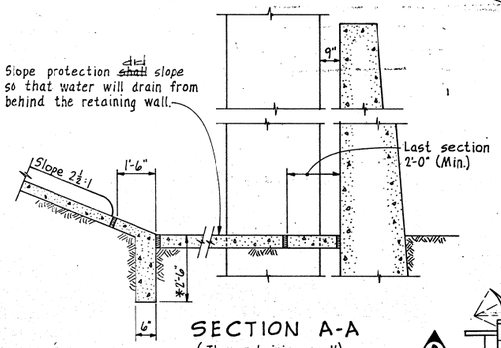

SECTION A-A
(Thru retaining wall)

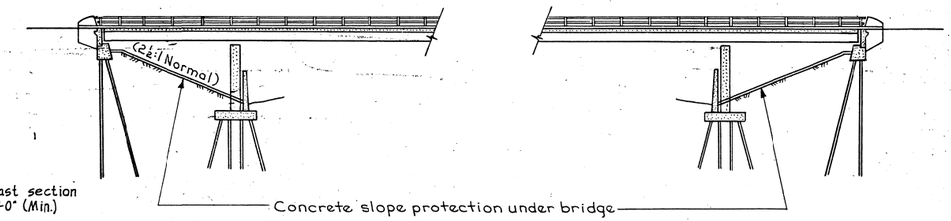

LONGITUDINAL SECTION ALONG ℄ ROADWAY

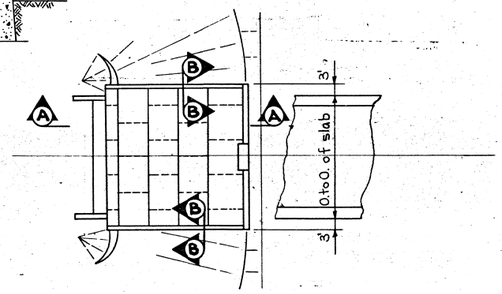

SLOPE PROTECTION LAYOUT 0° SKEW

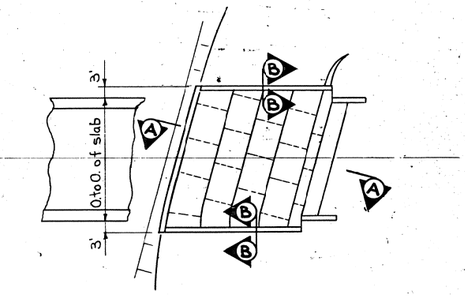

SLOPE PROTECTION LAYOUT 15° SKEW

Joints between blocks ~~to be~~ were staggered ½ block width in alternate courses.

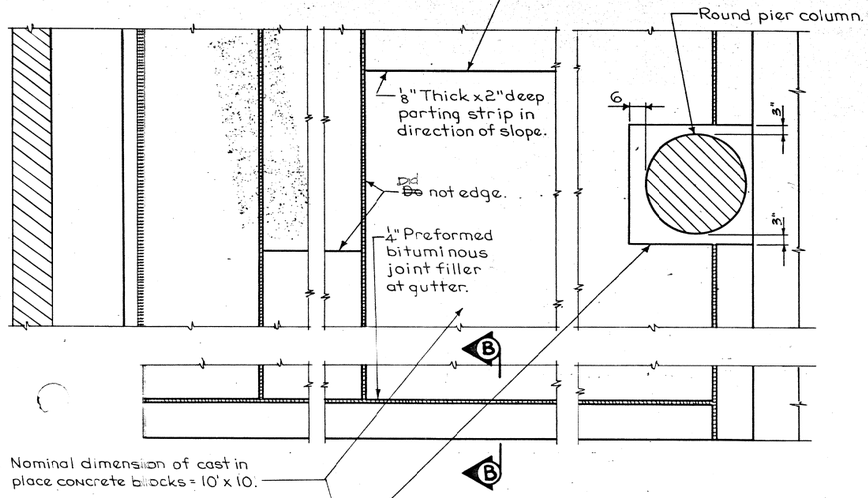

Nominal dimension of cast in place concrete blocks = 10' x 10'.

Slope protection ~~is to be~~ was formed out around column to this line and the remaining void was filled with commercial bituminous patching material as approved by the Engineer. No separate payment ~~will be~~ was made for the bituminous material. Omit drop wall along pier column as shown.

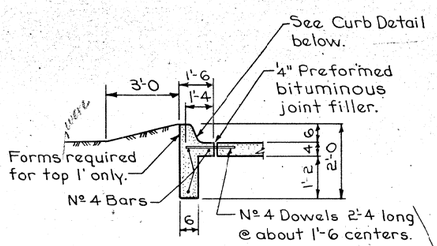

SECTION B-B

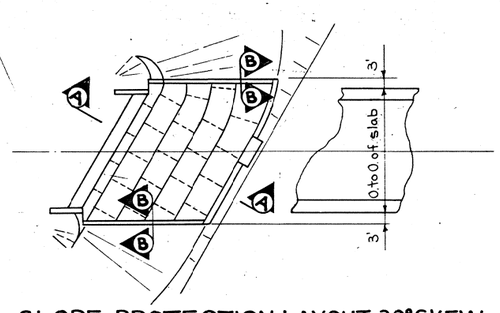

SLOPE PROTECTION LAYOUT 30° SKEW

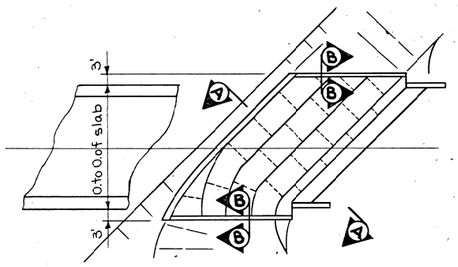

SLOPE PROTECTION LAYOUT 45° SKEW

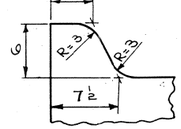

CURB DETAIL

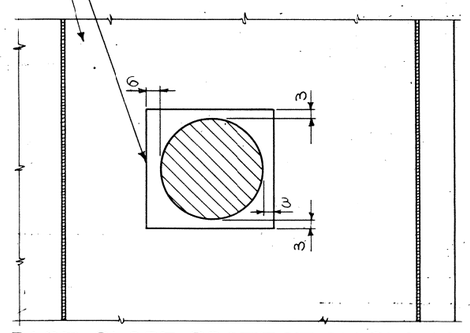

PART SLOPE PROTECTION PLAN FOR COLUMNS IN SLOPE
(0° SKEW)

GENERAL NOTES:

This sheet shows details for placing portland cement concrete slope protection under overhead structures.

The standard specifications of the Iowa Department of Transportation ~~shall~~ did apply with modifications or additions listed below:

Concrete - Class C Structural.
Finish - Class 1, Floated Surface Finish.
Cure - Cure as per current Specifications.
Subgrade Preparation - The subgrade ~~is to be~~ was shaped and compacted so that finished slope protection ~~will be~~ was similar to examples shown on this sheet. The subgrade ~~shall be~~ will be firm when concrete ~~is~~ was placed. Sprinkling required ~~shall be~~ will be done early enough so that concrete ~~is~~ was not placed on a muddy subgrade. No subgrade paper ~~will be~~ was required.

The cast in place concrete ~~is to be~~ was poured in approximately 10' wide courses, but all courses on one slope ~~should~~ will have approximately equal widths. Adjacent courses ~~shall~~ will not ~~be~~ be poured within 15 hours of one another. The joints in the direction of the slope are ~~to be~~ were staggered about ½ block width.

Basis of payment: Payment ~~will be~~ was made on a square yard basis for slope protection constructed. The unit price bid per square yard ~~is to~~ includes costs of all materials and labor required to construct this protection as shown or intended by these plans. The subgrade preparation including any necessary excavation or filling required to shape the slope to the lines shown on the plans and disposal of excess earth excavated as directed by the Engineer, ~~are~~ were considered incidental to placing the concrete slope protection.

Pay quantities ~~are to be~~ were based on field measured out to out dimensions.

Where erosion control work ~~is~~ was completed the Contractor ~~shall be~~ was responsible for any plant materials destroyed adjacent to slope protection area. The Contractor ~~shall~~ will replant, reseed and remulch ~~all~~ any damaged areas in accordance with Section 2601 of the Standard Specifications, Series of 1977, at his expense.

CONCRETE SLOPE PROTECTION			
BRIDGE	S. ABUT.	N. ABUT	TOTAL
SOUTH BOUND	~~791~~	~~930~~	~~1721~~
	685.7	926.1	1611.8
		Total (SQ. YDS.)	~~1721~~ 1611.5

DESIGN FOR 57°03'00" SKEW
336'-0" X VARI. CONTINUOUS
WELDED PLATE GIRDER BRIDGE
102'-6" END SPANS 131'-0" INTERIOR SPAN

CONCRETE SLOPE PROTECTION
STATION: 462+88.56 (℄ S. B. LANE, U.S. NO. 561) NOV. 1978
SCOTT COUNTY
IOWA DEPARTMENT OF TRANSPORTATION-HIGHWAY DIVISION
DESIGN SHEET NO. 29 OF 29 FILE NO. 25588 DESIGN NO. 980

DESIGNED BY ____ TRACED BY ____
DETAILED BY ____ CHECKED BY ____

CONCRETE SLOPE PROTECTION | STANDARD SHEET 1006 | SCOTT COUNTY | PROJECT NUMBER

STATE	FED. ROAD DIST. NO.	FISCAL YEAR	SHEET NO.	TOTAL SHEETS
IOWA	5	—	61	~~125~~ 130

62 7087-101, 130

FOUNDATION NUMBER	PILING LOG	KIND OF PILING
South Abutment		HP10x42 Steel Bearing

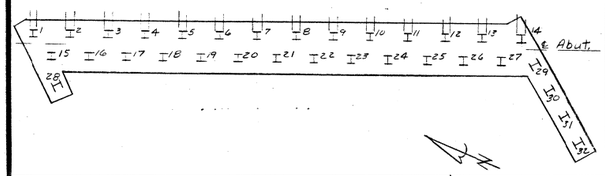

PILE NO.	LENGTH IN STRUCTURE	BEARING (in Tons)	PILE NO.	LENGTH IN STRUCTURE	BEARING (in Tons)	PILE NO.	LENGTH IN STRUCTURE	BEARING (in Tons)
1	80.9	34.5	17	79.4	44.8			
2	87.1	73.8	18	80.4	53.6			
3	86.1	73.8	19	80.6	48.2			
4	79.4	34.5	20	79.2	38.9			
5	84.9	73.8	21	79.9	56.7			
6	78.4	35.7	22	80.4	64.3			
7	80.9	49.7	23	80.5	53.6			
8	80.7	38.6	24	81.0	47.1			
9	79.4	37.3	25	80.3	40.7			
10	80.2	27.3	26	80.1	37.1			
11	81.0	32.1	27	80.7	37.1			
12	79.8	37.3	28	80.4	40.7			
13	84.1	68.9	29	79.8	38.9			
14	79.6	34.4	30	80.5	41.9			
15	80.7	43.5	31	80.0	45.9			
16	79.5	40.7	32	80.3	43.8			

FOUNDATION NUMBER	PILING LOG	KIND OF PILING
North Abutment		HP10x42 Steel Bearing

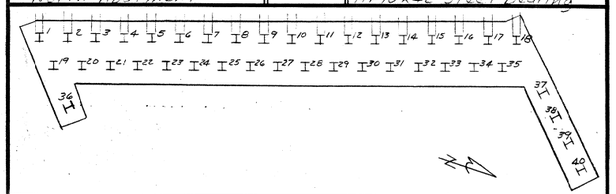

PILE NO.	LENGTH IN STRUCTURE	BEARING (in Tons)	PILE NO.	LENGTH IN STRUCTURE	BEARING (in Tons)	PILE NO.	LENGTH IN STRUCTURE	BEARING (in Tons)
1	73.2	Ref.	21	73.2	Ref.			
2	72.1	Ref.	22	73.2	Ref.			
3	72.9	62.0	23	74.1	Ref.			
4	73.1	Ref.	24	73.9	65.8			
5	74.2	Ref.	25	74.3	Ref.			
6	73.9	Ref.	26	74.0				
7	74.5	63.8	27	73.4				
8	74.0	Ref.	28	73.4				
9	73.5		29	73.3				
10	74.1		30	73.7				
11	73.8		31	72.9				
12	73.7		32	73.6				
13	74.3		33	73.4				
14	74.5		34	73.2				
15	73.4		35	72.2				
16	74.1		36	72.8	Ref.			
17	74.1		37	64.4	24.8			
18	73.7		38	63.2	25.5			
19	72.1		39	63.9	23.5			
20	72.5	Ref.	40	63.8	21.8			

FOUNDATION NUMBER	PILING LOG	KIND OF PILING
Pier #1		Creosoted

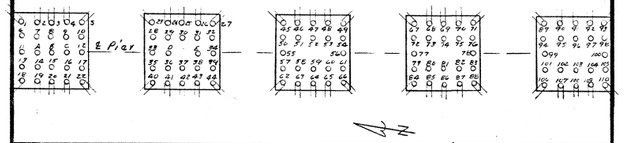

PILE NO.	LENGTH IN STRUCTURE	BEARING (in Tons)	PILE NO.	LENGTH IN STRUCTURE	BEARING (in Tons)	PILE NO.	LENGTH IN STRUCTURE	BEARING (in Tons)
1	38.9	21.1	37	39.3	39.2	73	39.3	Ref.
2	39.2	Ref.	38	39.1	34.7	74	39.6	Ref.
3	39.0	Ref.	39	39.0	24.9	75	39.2	Ref.
4	39.0	Ref.	40	39.4	24.9	76	38.9	26.8
5	39.5	28.9	41	39.1	23.5	77	39.6	Ref.
6	24.5	00.0	42	39.2	22.3	78	38.8	
7	39.5	37.5	43	39.0	27.4	79	39.4	
8	39.6	36.2	44	39.4	26.0	80	39.5	
9	38.5	38.9	D	39.2	35.4	81	39.7	
10	24.1	00.0	E	38.2	36.5	82	39.5	
11	39.5	32.3	45	38.6	Ref.	83	39.4	
12	23.9	00.0	46	38.8		84	39.6	
13	38.7	32.3	47	38.8		85	39.6	
14	39.2	32.3	48	38.7		86	39.5	
15	38.8	Ref.	49	38.5		87	39.2	
16	38.9	Ref.	50	39.0		88	39.3	Ref.
17	38.9	34.7	51	39.2		89	38.8	24.9
18	39.1	28.8	52	38.9		90	39.1	26.1
19	37.4	32.3	53	38.9		91	39.1	29.5
20	39.3	32.3	54	38.4		92	39.5	25.5
21	39.1	Ref.	55	39.1	Ref.	93	39.1	25.7
22	39.1	25.3	56	39.3	39.4	94	38.9	24.4
A	39.1	27.4	57	39.2		95	38.4	20.3
B	39.3	34.7	58	39.2		96	39.1	20.0
C	39.2	26.7	59	39.2		97	39.2	22.7
23	39.2	28.1	60	39.4		98	39.2	22.7
24	39.1	32.2	61	39.4		99	39.3	Ref.
25	39.3	36.5	62	39.4		100	39.0	23.8
26	39.3	25.3	63	39.3		101	39.5	16.3
27	39.1	23.0	64	39.3		102	39.6	Ref.
28	39.0	32.2	65	39.4		103	39.2	20.4
29	39.4	36.0	66	39.4		104	39.3	16.9
30	43.7	25.6	67	38.4		105	39.4	18.2
31	39.0	34.8	68	38.6		106	39.3	23.8
32	39.3	26.6	69	37.4		107	39.8	23.8
33	29.3	35.1	70	39.1		108	40.0	15.7
34	38.9	25.3	71	38.4		109	39.7	17.1
35	39.7	Ref.	72	39.3	Ref.	110	39.0	17.7
36	39.7	30.5						

FOUNDATION NUMBER	PILING LOG	KIND OF PILING
Pier #2		Creosoted

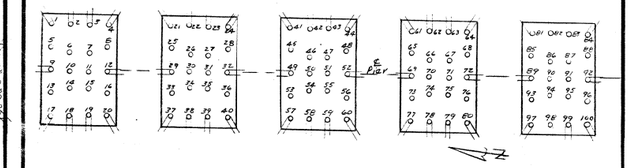

PILE NO.	LENGTH IN STRUCTURE	BEARING (in Tons)	PILE NO.	LENGTH IN STRUCTURE	BEARING (in Tons)	PILE NO.	LENGTH IN STRUCTURE	BEARING (in Tons)
1	39.9	Ref.	35	38.1	Ref.	68	38.7	Ref.
2	39.0		36	33.2		69	39.0	32.6
3	39.3		37	38.0		70	39.2	Ref.
4	39.5		38	39.0		71	39.2	
5	39.6		39	39.7		72	36.0	
6	39.4		40	39.0	Ref.	73	39.4	
7	39.1		41	38.2	34.4	74	39.3	
8	39.3		42	39.4	Ref.	75	38.6	Ref.
9	39.3		43	38.4	35.0	76	39.0	37.7
10	37.5		44	38.4	Ref.	77	39.0	39.8
11	39.3	Ref.	45	39.2	38.4	78	39.1	Ref.
12	39.4	37.7	46	39.0	35.7	79	37.4	35.0
13	39.6	Ref.	47	38.8	Ref.	80	39.0	Ref.
14	38.0		48	38.9	Ref.	81	38.7	34.0
15	38.8		49	39.6	38.4	82	38.5	Ref.
16	39.2		50	39.2	Ref.	83	38.2	Ref.
17	39.9		51	39.1		84	38.5	36.7
18	39.2		52	39.2		85	38.8	36.7
19	38.7		53	34.2		86	38.8	Ref.
20	39.4		54	33.6		87	38.5	Ref.
21	39.0		55	34.2		88	38.5	Ref.
22	38.0		56	34.9		89	38.5	Ref.
23	38.7		57	39.5		90	38.7	36.7
24	38.6		58	39.3		91	38.9	36.7
25	39.3	Ref.	59	39.3	Ref.	92	38.8	39.3
26	39.2	36.4	60	39.4	39.1	93	38.9	Ref.
27	37.3	Ref.	61	38.6	Ref.	94	38.5	Ref.
28	39.3	Ref.	62	38.4	Ref.	95	38.8	Ref.
29	39.2	39.8	63	38.5	Ref.	96	38.4	36.7
30	39.2	Ref.	64	38.3	39.8	97	27.0	Ref.
31	39.6		65	33.7	Ref.	98	38.5	Ref.
32	39.2		66	38.5	Ref.	99	38.8	Ref.
33	39.6		67	38.7	Ref.	100	39.0	Ref.
34	39.1	Ref.						